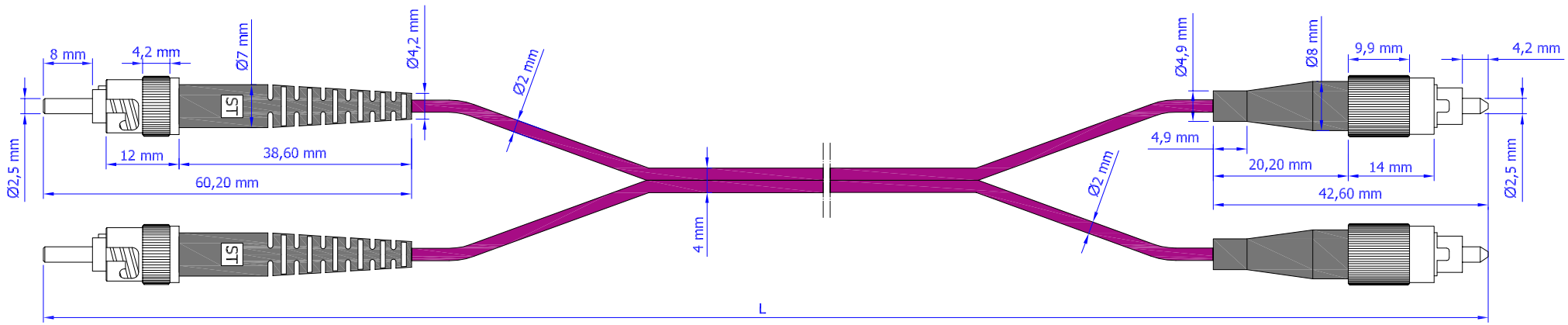

Date	6.03.2023	Rev.	Revision Detail	Rev.Dt.	Rev.by	Part No	
Designed by	Zeynep ŞAHİN					ST/PC-FC/PC 50/125 OM4 MM DX L:X M PATCH CORD	
Checked by	Fatih BOLACA						
TTAF®						Drawing Nr.	Scale	Sheet No
						FO-05135PPDX20X	NONE	1/1

A4

Form No: FR-01/004 İYT: 10/2003 Rev:06 09/01/2012