C2.4

MICRO SWITCH
A DIVISION OF MINNEAPOLIS-HONEYWELL REGULATOR COMPANY
FREEPORT, ILLINOIS
FED. MFR. CODE 91929

ACTUATOR-SWITCH

"12MA" SERIES
CHART 2

S

PLASTIC BUTTON COLOR	ACTUATOR-SWITCH CAT. LIST.
BLACK	12MA5
RED	12MA6
GREEN	12MA7

THIS DRAWING COVERS A PROPRIETARY ITEM AND IS THE PROPERTY OF MICRO SWITCH, A DIVISION OF HONEYWELL. THIS DRAWING IS NOT TO BE COPIED OR USED WITHOUT THE APPROVAL OF MICRO SWITCH.

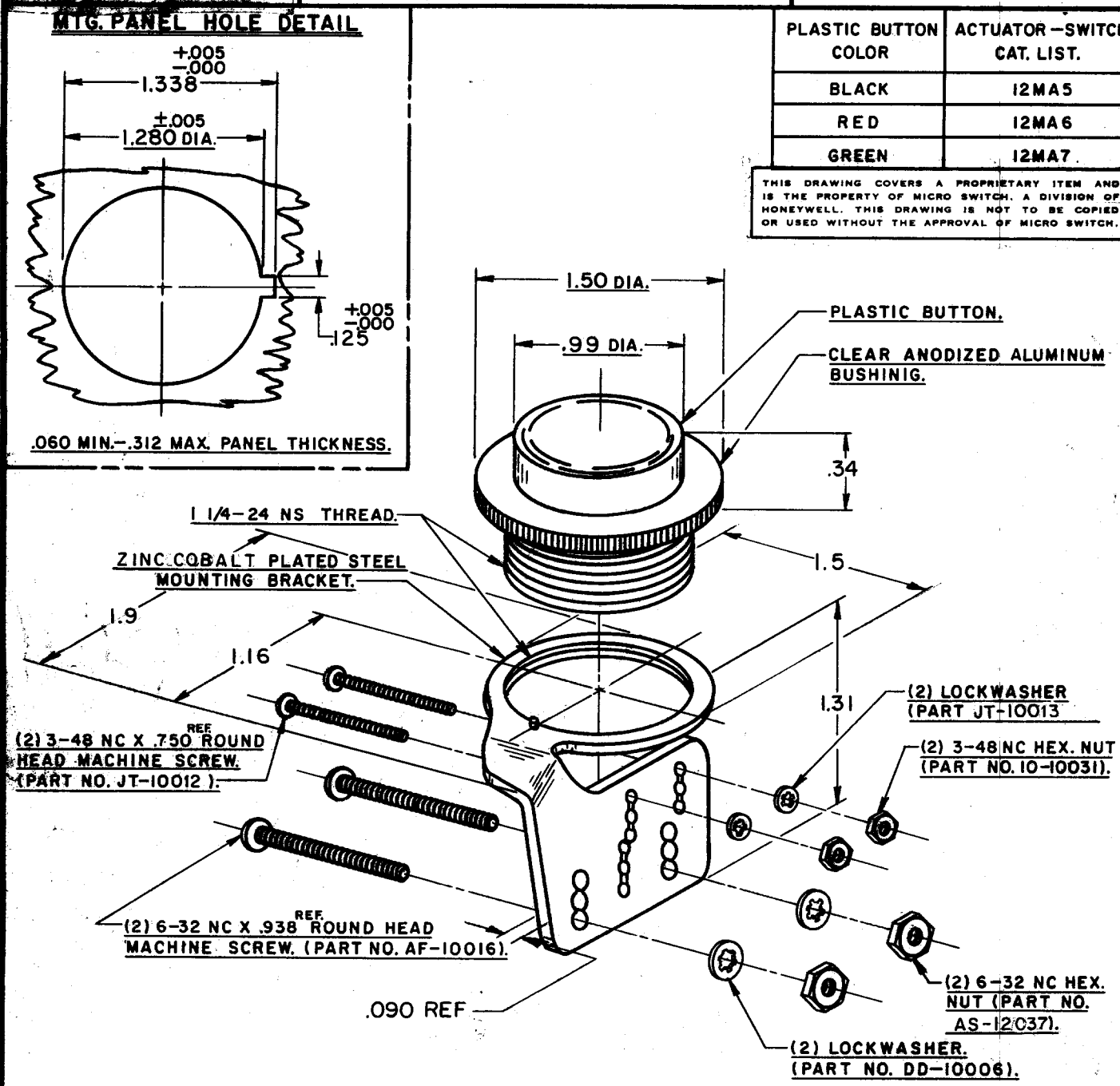

NOTE—

1—NOT SUITABLE FOR USE WITH ITBI-3 TYPE BASIC.
2—TWO COMPLETE SETS OF SCREWS, NUTS AND WASHERS FURNISHED UNASSEMBLED (CUSTOMER WILL SELECT PROPER SET).
3—THE VARIOUS PANEL THICKNESSES MAY BE ACCOMMODATED WITH THIS ACTUATOR BY PROPER SELECTION OF BASIC SWITCH MOUNTING HOLES.

CHARACTERISTICS	ELECTRICAL DATA	SCALE — FULL
	CONTACT ARRANGEMENT	DO NOT SCALE PRINT
		UNLESS OTHERWISE SPECIFIED DIMENSIONS ARE IN INCHES
		TOLERANCES ARE:
		ONE PLACE (.0) ±.030
		TWO PLACE (.00) ±.015
		THREE PLACE (.000) ±.005
		ANGLES ±
		WEIGHT

M "12MA" SERIES CHART 2
DRAWING NUMBER
ISSUE
REPLACES
RELEASE NO. SR 7525
REVISIONS
A C013074
M.B.F. 2 SEPT 58
B C013992
M.B.F. 18 AUG 59
C C014480
L S D 2 MAR 60
D C014441
L S D 31 MAR 60
E C018474
L E B 26 SEPT 63
F CO 37516
GLH 20 SEPT 76
G C078546
DLT 1 SEP 94
CHECK
24 MAY 58
ACE
CHECK
2 JUNE 58
GCH
CHECK
22 MAY 58
DRAWN
K. A. F.
FO-50378