MICRO SWITCH
FREEPORT, ILLINOIS, U.S.A.
A DIVISION OF HONEYWELL

FED. MFG. CODE 91929

SWITCH-ACTUATOR

CATALOG LISTING
JX-26

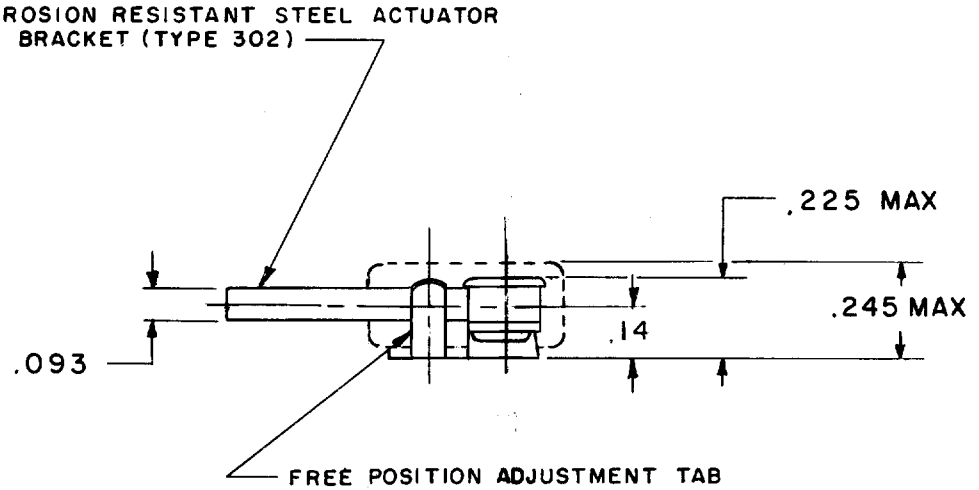

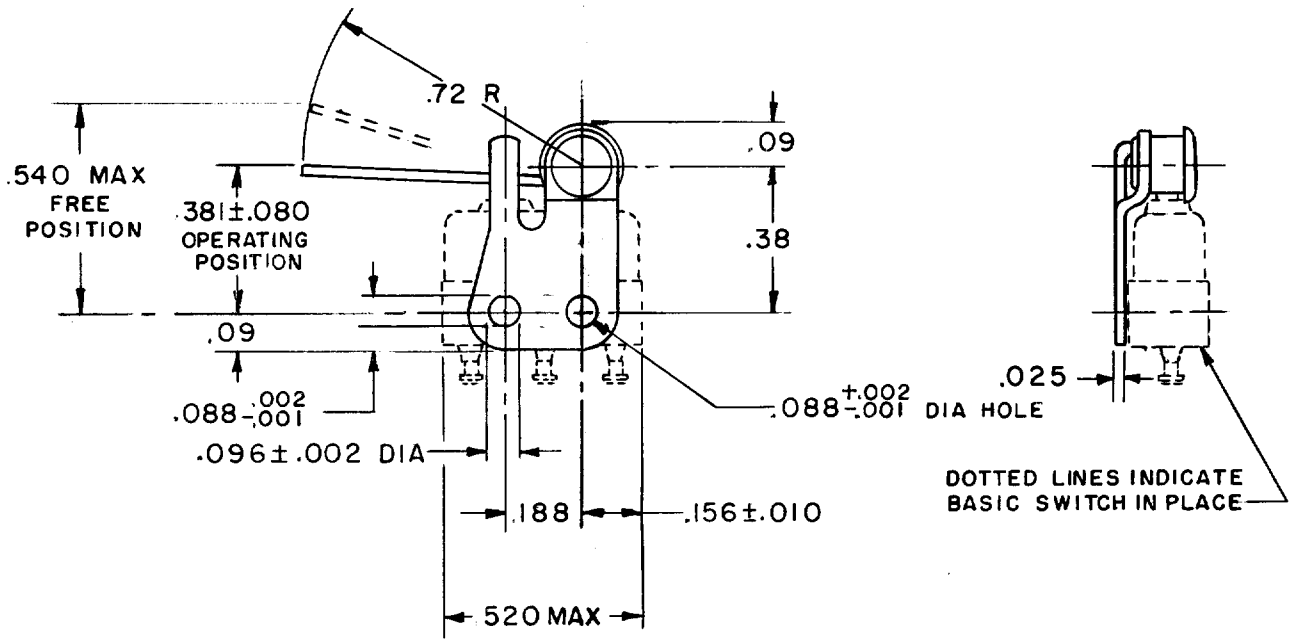

THIS DRAWING COVERS A PROPRIETARY ITEM AND IS THE PROPERTY OF MICRO SWITCH, A DIVISION OF MINNEAPOLIS-HONEYWELL REGULATOR CO. THIS DRAWING IS NOT TO BE COPIED OR USED WITHOUT THE APPROVAL OF MICRO SWITCH.

CHARACTERISTICS WITH ISXI-T BASIC SWITCH INSTALLED

OPERATING FORCE — — — 1.5 OZ MAX

RELEASE FORCE — — — 4 GRAMS MIN

DIFFERENTIAL TRAVEL — — .030 MAX

OVERTRAVEL — — — — — .015 MIN

ELECTRICAL DATA

CONTACT ARRANGEMENT

SCALE 2 TO 1

DO NOT SCALE PRINT

UNLESS OTHERWISE NOTED
DIMENSIONS ARE IN INCHES

TOLERANCES ARE:

ONE PLACE	(.0)	±.030
TWO PLACE	(.00)	±.015
THREE PLACE	(.000)	±.005
ANGLES		±

WEIGHT

JX-26	REPLACES		
M	RELEASE NO. PR-1303		
DRAWING NUMBER			
X2			
ISSUE X			
3	CHECK		
REVISIONS			
A CORR. VDF 11 SEPT 63	27 AUG 63		
B PR-1303 L S D 13 MAY 70			
	FWF		
	CHECK		
	27 AUG 63		
	PAW		
	CHECK		
	27 AUG 63		
	DRAWN MBF		

FO-50378