Rev.	Description of Change	ECN No.	Date
P	DELETE 'BOSTON U.S.A'	05040	01/18/05

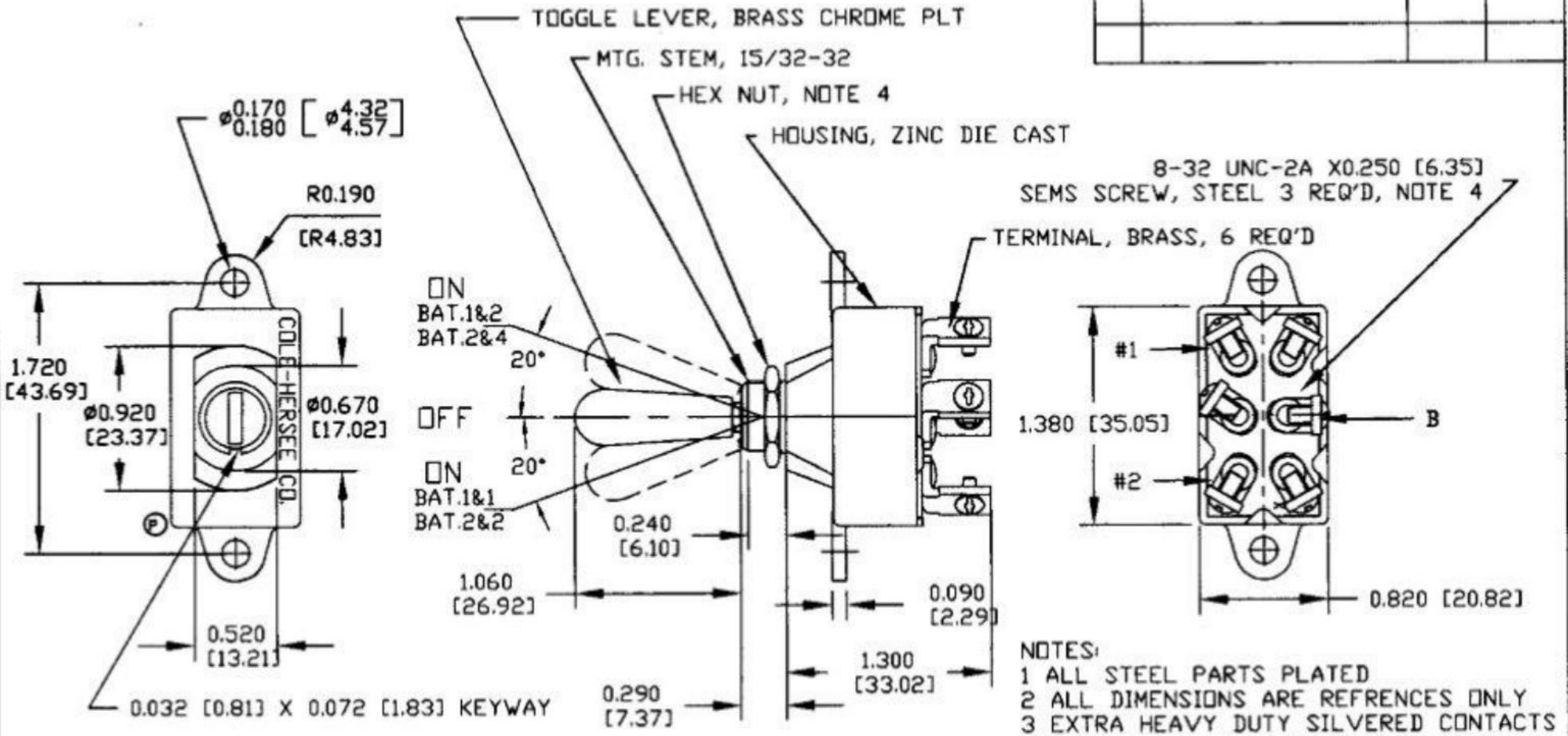

NOTES:
1 ALL STEEL PARTS PLATED
2 ALL DIMENSIONS ARE REFRENCES ONLY
3 EXTRA HEAVY DUTY SILVERED CONTACTS
4 HEX NUTS & SCREWS TO BE BAGGED
5. 12V DC-- 30AMP LAMP LOAD
35AMP INDUCTIVE LOAD