FOR-1754 Rev.1.1

未注公差/General tolerances(mm)														
0 ~ 3	>3 ~ 6	>6 ~ 10	>10 ~ 18	>18 ~ 30	>30 ~ 50	>50 ~ 80	>80 ~ 120	>120 ~ 180	>180 ~ 250	>250 ~ 315	>315 ~ 400	>400 ~ 500	>500	0.1/10
±0.12	±0.18	±0.22	±0.26	±0.31	±0.37	±0.57	±0.80	±0.93	±1.05	±1.15	±1.60	±2.20	±2.50	±2°

PCB LAYOUT

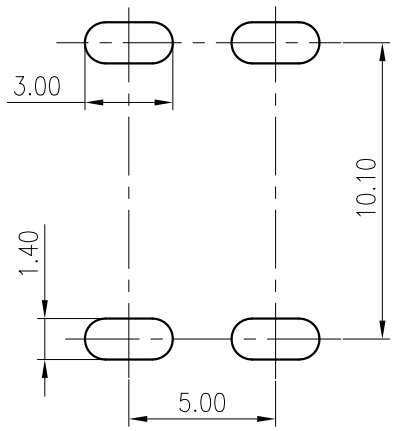

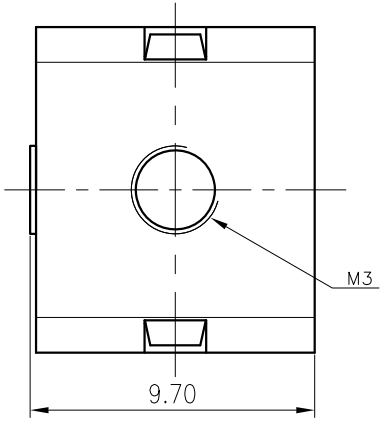

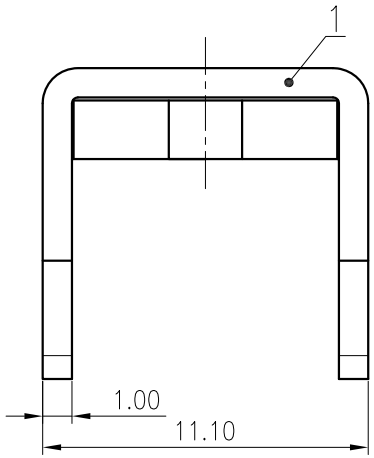

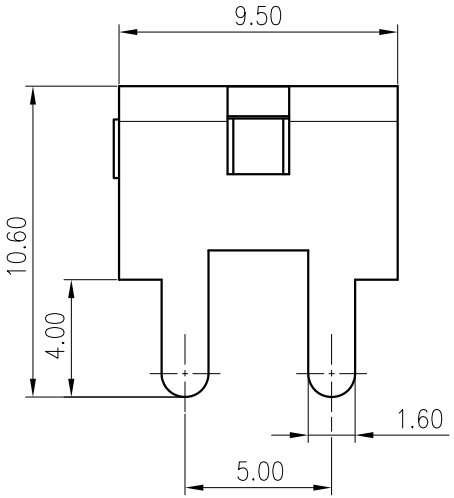

文管中心
研发专用
2020. 05. 23
(仅限内部使用,对外无效)

ITEM	NAME OF PART	MATERIAL	NOTES
1	Pin header	Copper alloy	M3/Sn Plated

额定电流Current(A)	63A
螺丝扭矩/Torque Tightening(N·m/Lb.in)	M3, 1.0/8.86
符合RoHS环保要求/Conform to RoHS	Yes

REV	ECN	DESCRIPTION	DRFT	DATE

MATERIAL:
SURFACE:
MAT NO.: /
STATUS: /
APPD: Lan ChH 2020.05.23
CHKD: Gong YZh 2020.05.23
DRFT: Xin 2018.10.11

DEGSON®
宁波高松电子有限公司
NINGBO DEGSON ELECTRICAL CO., LTD

NAME: K40-03A(H)
DRAWING NO.: K40-C04
REV: T0
SIZE: A4
mm (inch)
TYPE: CUSTOMER DRAWING
SCALE: 4:1
SHEET: 1/1