GS9331

V1.0

Wifi AP develop Board Spec

1、 Overview：.....- 3 -
2、 Configuration specification：.....- 4 -
3、 Setting the board：.....- 6 -
4、 Special Considerations.....- 6 -

i. Overview:

Module have 512Mbit 400MHZ DDR2 Ram, 32/64/128Mbit SPI Flash.150Mbps(130Mbps)WIFI rate, PCB Antenna/SMA antenna interface , 3 100M Ethernet port(1 Wan, 2 Lan),20 GPIOs
Module base on openwrt firmware.
Most source you can get from:
Http://openwrt.org
https://dev.openwrt.org/
https://dev.openwrt.org/wiki/GetSource
Because our module doesn't support by openwrt offical website now. we will send you our patch. Please pay attention to the source code version. Thanks.
The small module can only use our own.

Welcome to obtain schematic.

ii. Configuration specification：

Interfaces

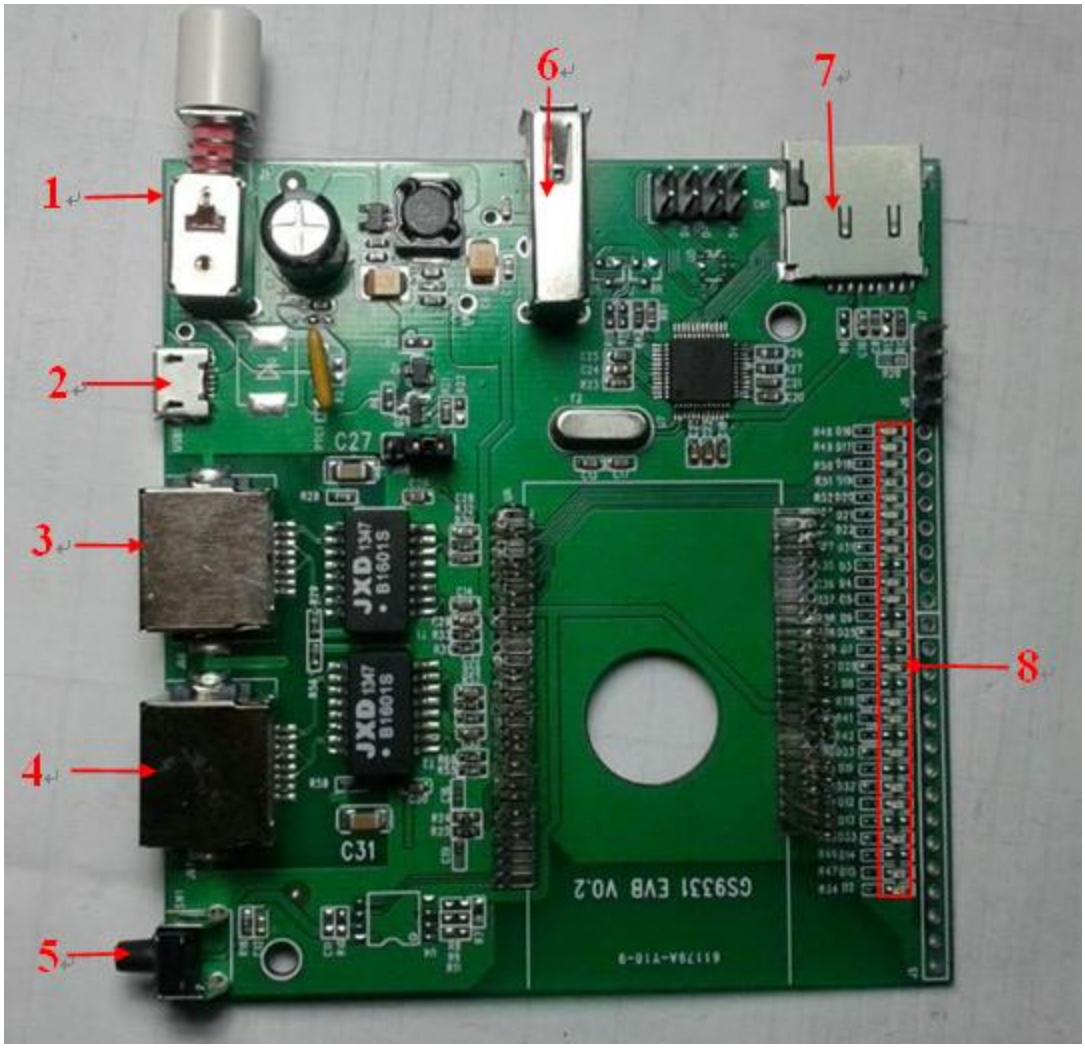

Spec：

No	Name	function
1	Power Push-switch	Switch
2	DC inject	Power volt: +5V Micro-USB Input
3	Eth 1	Eth 1 Lan(default)
4	Eth 2	Eth 1 Lan(default)
5	Reset	Reset,High active
6	USB 2.0	USB 2.0,Can plug in U-disk,Wifi adapter, USB camera and so on.
8	SD card reader	Mini SD

	(optional)	
8	LED	GPIO LEDs

Keys:

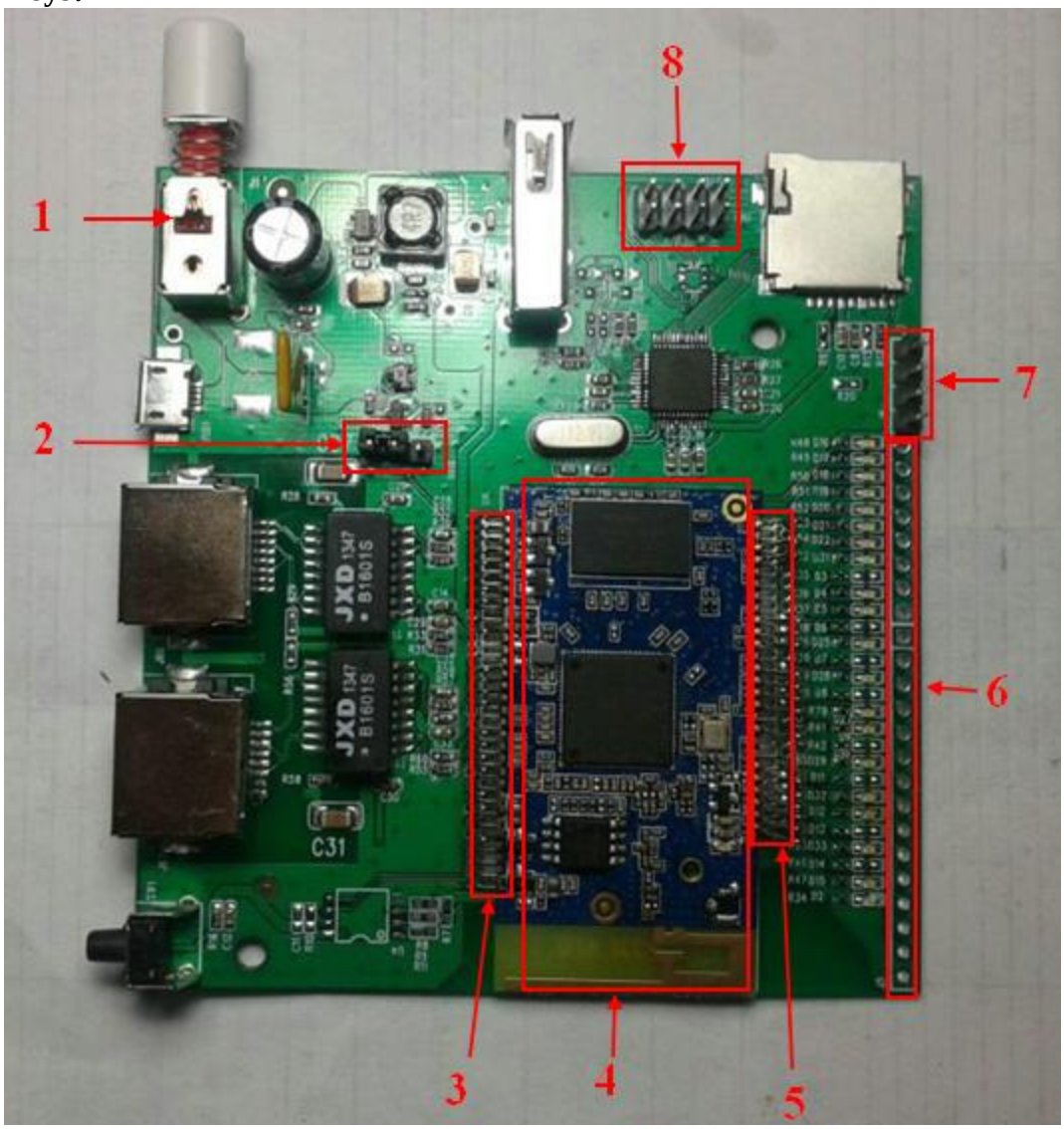

spec:

No	spec	function
1	Power	Power
2	Headers	IO18 control Vbus
3	GPIOs	GND,IO23,IO20,IO19,IO18,IO22,IO24,IO21,3.3V,3.3V,GND,GND,P4_RX+,P4_RX-,P4_TX+,P4_TX+,GND,USB-,USB+,GND,E_2.0V,GND,SPI_CS0,SPI_MIS0,SPI_MOSI,SPI_SLK
4	GS-OOLITE-V1	Small module
5	GPIO	GND,GND,UTX,URX,GND,GND,GND,GND,IO0,IO13,GND,IO14,IO15,IO16,IO17,3.3V,3.3V,GND,GND,IO8,IO6,IO7,IO11,IO27,IO26,GND
6	Headers	GPIOs

7	TTL debug	TTL：TX,RX,GND,VCC.
8	Headers	2×USB

Setting the board：

As usually openwrt router.

Special Considerations

The block diagram of the GS9331 Wifi AP develop board

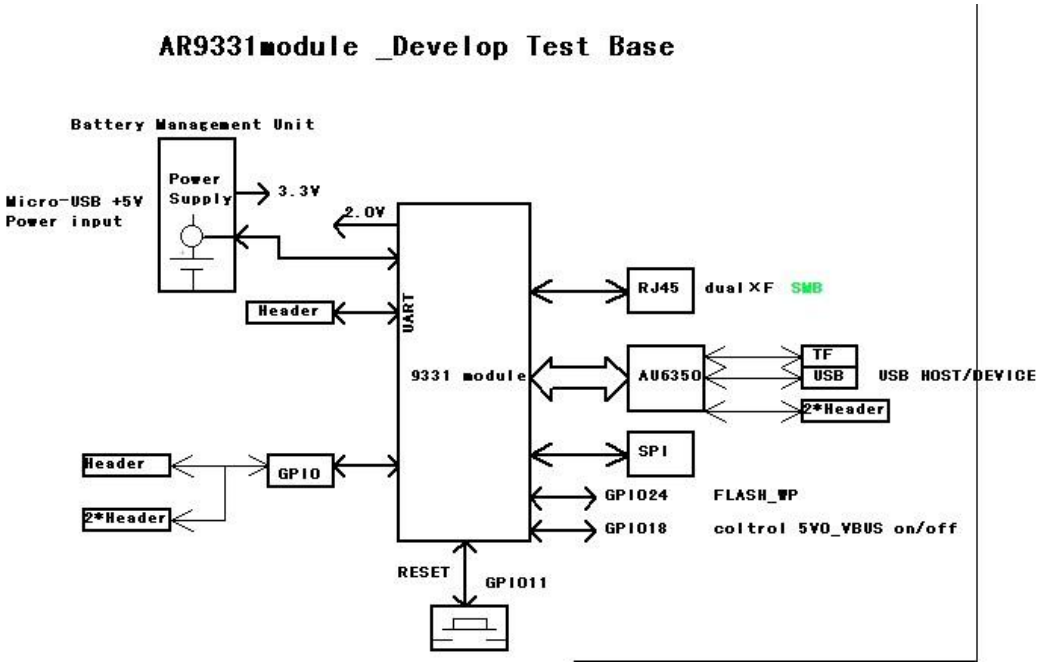

If the control circuit of GPIO11(RESET) access to 3.3V, recommended circuit:

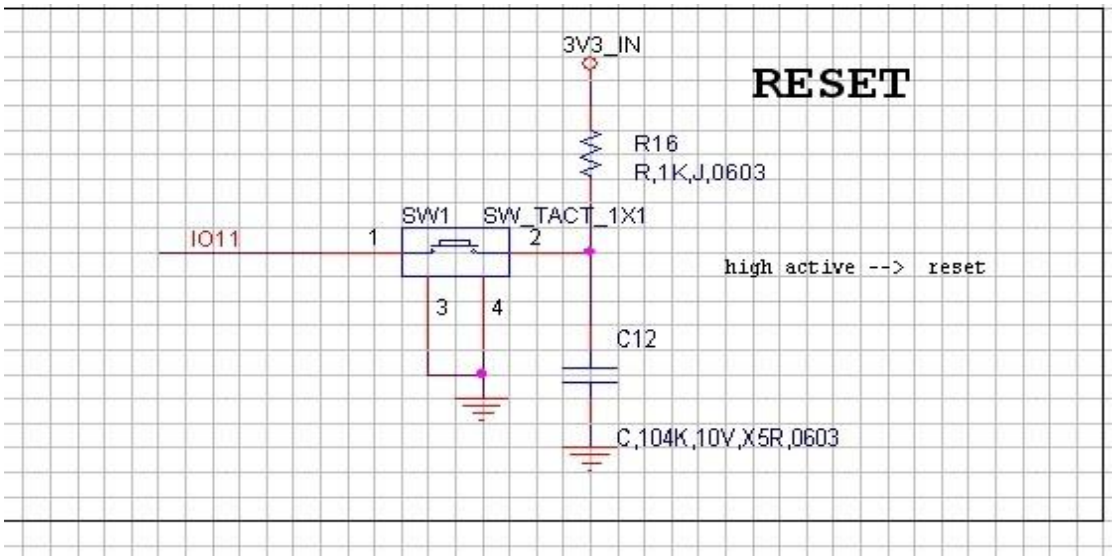
3V3_IN
RESET
R16
R,1K,J,0603
SW1
SW_TACT_1X1
IO11
1
2
3
4
high active --> reset
C12
C,104K,10V,X5R,0603

The module

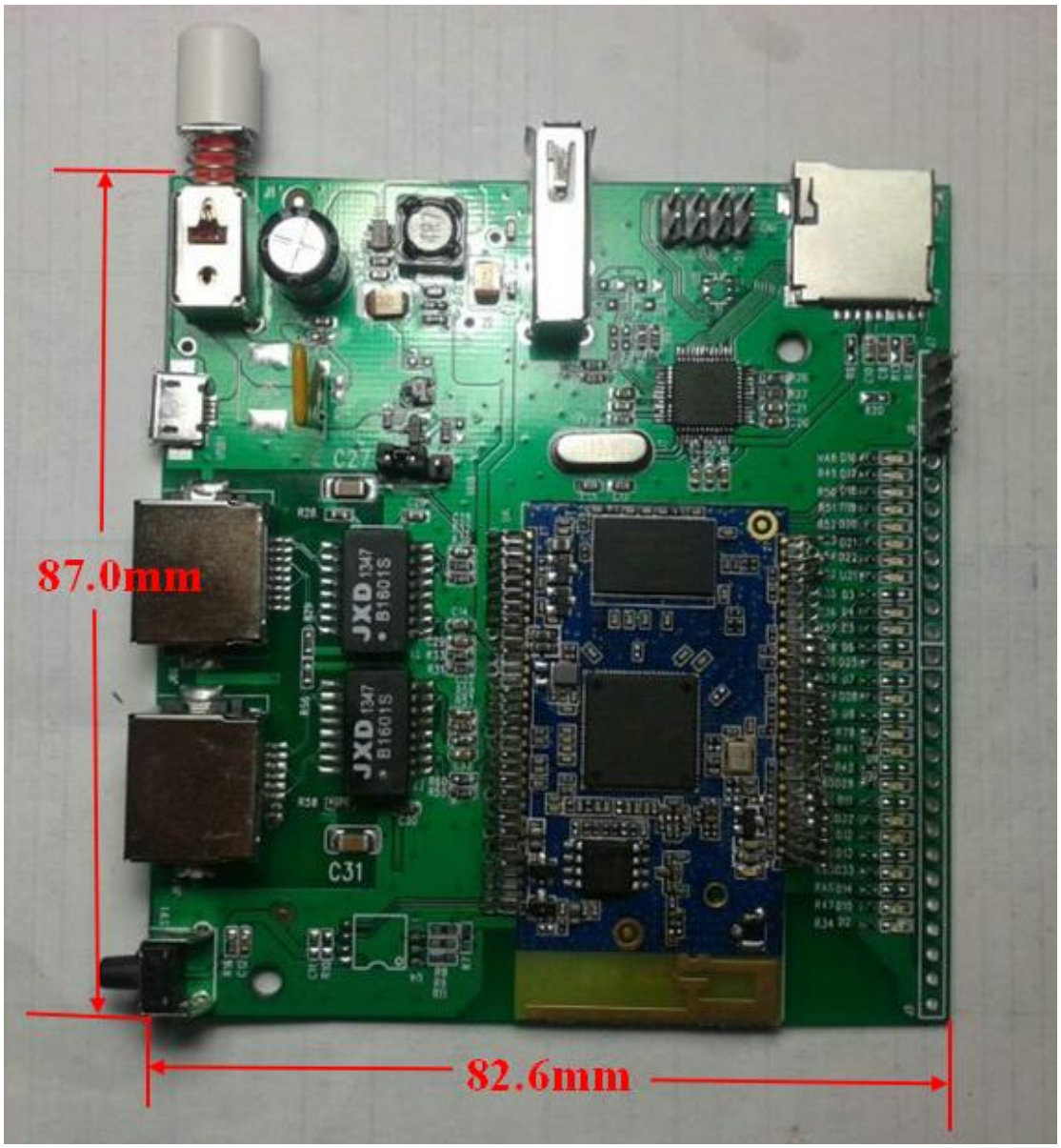
87.0mm
82.6mm
C31