Led Spacer Support Series

KLS8-0136 Led Spacer Support Series

Material: UL approved Nylon 66, 94V-2
No tools are required
Unit:mm

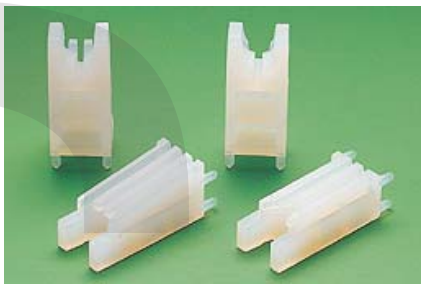

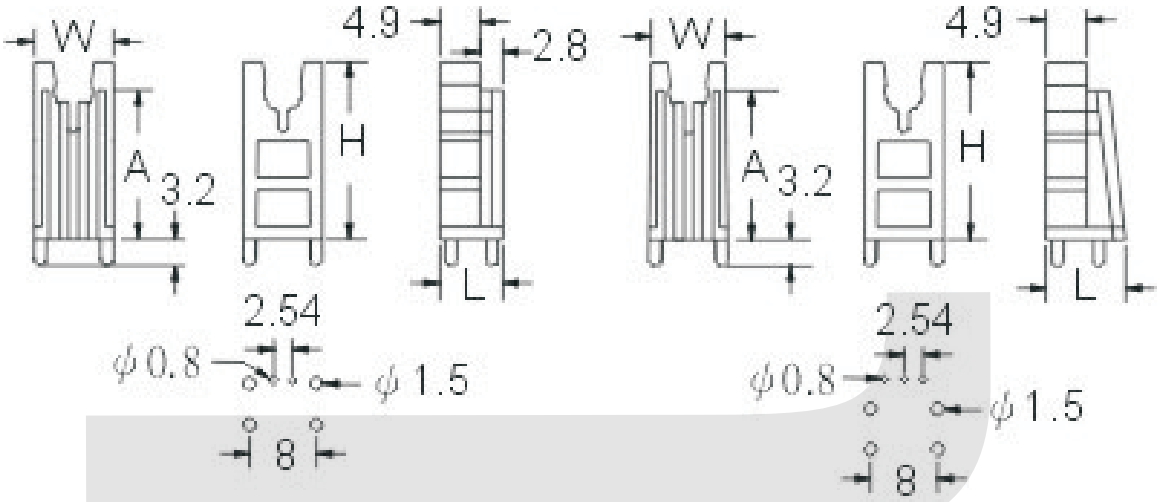

PLX-18 PLW-18

Model No.	A	L	W	H
PLX-18	18.2	7.7	9.6	21.6
PLW-18	18.2	9.5	9.6	21.6

ORDER INFORMATION

KLS8-0136-PLX-18.0

- Hight
- 90° LED Spacer Support Series
- Part Number