REV.	DESCRIPTION	DATE	DRAWN	APPROVED
A1	DWG.REL	2016/10/7	FANG	YANG

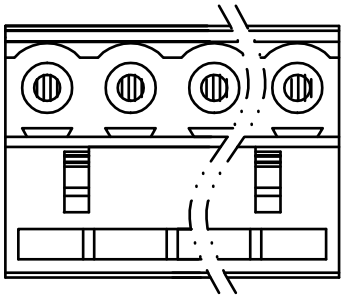

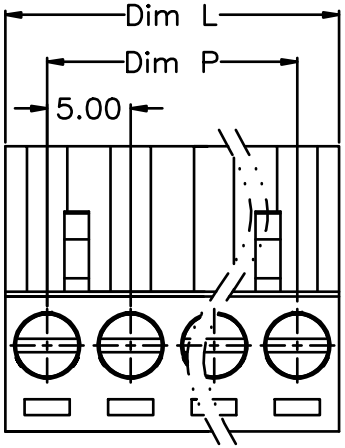

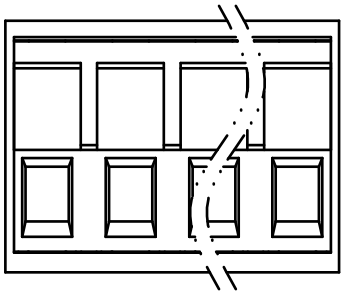

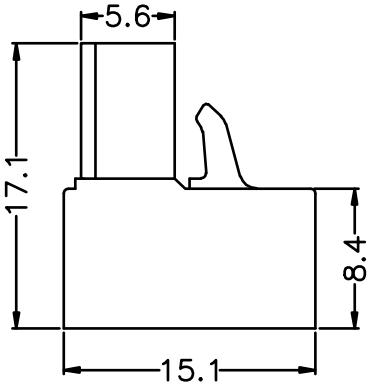

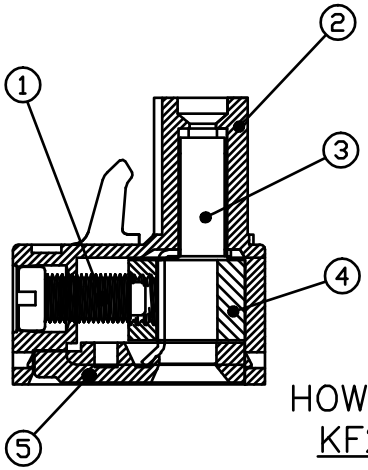

- Material
  1. Screws : M3.0 steel, Zinc plated, "–" slot type
  2. Housing : PA66, UL94V–0
  3. Contact : Phosphor bronze,Ni plated
  4. Clamp : Brass, Ni plated
  5. Cover : PA66, UL94V–0

- Electrical

	UL	IEC
Rated voltage :	300V	320V
Rated current :	15A	20A

Insulation resistance: 500MΩ/DC500V
Withstanding Voltage : AC2000V/1min
Wire range: 28–12AWG 2.5mm²

- Mechanical
  Operating temperature:–40℃~+105℃
  Soldering temperature:250℃±5/5sec
  Torque: 0.5N.m (4.43Lb.in)
  Strip length: 7–8mm

N=Number of Poles
Dim P=(N–1)x5.08
Dim L=Nx5.08

Poles \ Dim	Dim P	Dim L
2–6P	±0.10	±0.15
7–12P	±0.20	±0.20
13–18P	±0.25	±0.30
19–24P	±0.30	±0.40

HOW TO ORDER

KF2EDG–X–5.08–XXP–1 X–XXXXX

- KF2EDG–X → MODEL
- 5.08 → Pitch:mm
- XXP → No.of poles: 2~24P
- 1 → 1:Single Pitch, 2:Double Pitch
- X → Color: G:Green, R:Red, K:Black, W:White, O:Orange, B:Blue, GR:Gray
- XXXXX → Customer Request

GENERAL TOLERANCE		ANGLE TOLERANCE	
X.	±0.5	X°.	±5°
.X	±0.3	.X°	±3°
.XX	±0.1	.XX°	±1°

DRAWING TYPE	CUSTOMER		
SCALE	1:1	SHEET	1 OF 1
DRAWING NO.	XP0012016–xxxx		

PROJECTION		TITLE	KF2EDG–X–5.08–XXP
UNITS	mm		
SHEET SIZE	A4	SERIES	KF2EDG–X

慈溪市凯峰电子有限公司
KAIFENG ELECTRONIC CIXI KAIFENG ELECTRONIC CO.LTD