DEGSON ELECTRONICS CO., LTD.

Product Specification

2EDG-DBM-5.08

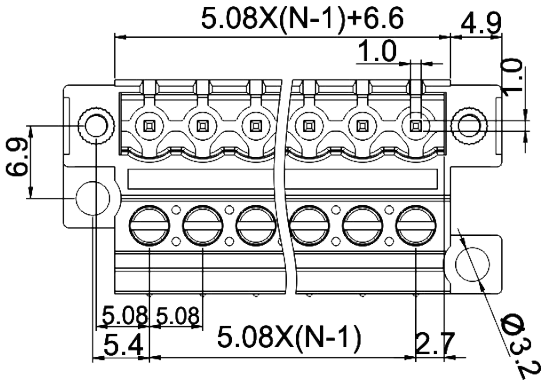

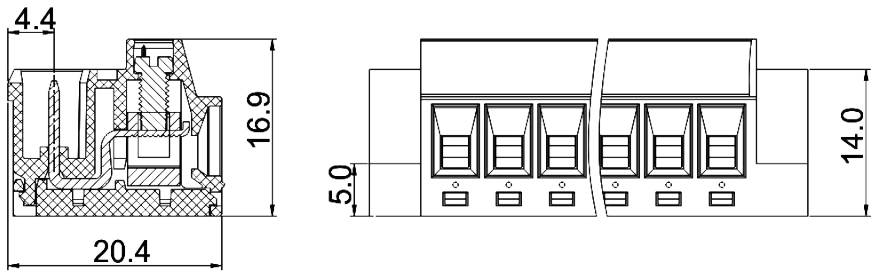

Approval		
Electrical		
Standard	**UL**	**IEC**
Rated voltage	300V	320V
Rated current	15A	20A
Wire range	28-12AWG	2.5mm^2
With standing voltage	AC2500V/1Min	
Mechanical		
Torque	0.4Nm(3.5Lb-In)	
Ambient temperature	-40℃~+105 ℃	
Strip length	7mm	
Dimensions		
Pitch	5.08mm(.200″)	
Poles	2P-22P	
Material		
Housing	PA66,UL94V-0	
Screws	M2.5,steel, Cr^{3+}Zn plated	
Contact	Copper	
Cage	Brass,Ni plated	

HOW TO ORDER :

[ ] – [ ][ ] P — 1 [ ] — [X][X][X] Customer Request

Series No. | No. of pole | Color

1	Gray	4	Green	7	Transp-arent
2	Blue	5	Orange	8	Yellow
3	Black	6	Red	9	white

mm (INCH)	DEGSON ELECTRONICS CO., LTD.	
THIRDANGLE PROJECTION	NAME	2EDG-GBM-5.08