NO.: RD20200509002 **TO: Ozdisan**

APPROVAL SHEET No. : T-0615A

Series No.: MRW

Specification No.:

RoHS

APPROVAL SHEET

FOR AL. ELECTROLYTIC CAPACITORS

No.	(Customer No.)	(Koshin Part No.)	Description	ΦD x L
1		MRW-016V471MF105-T/R	16V470μF	8X10.5

APPROVED BY:

PLEASE SIGN RETURN US ONE COPY OF THE APPROUAL SHEET.

DESIGNED BY:MENGXIAOCONG CHECKED BY:JUANGYUANYUAN APPROVED BY: HAUNGXUEHUI
DATE: 2020-5-9

KOSHIN

DJS-DS-0013

KOSHIN

1. Inner conformation drawing and inner constitute parts(curtness drawing):

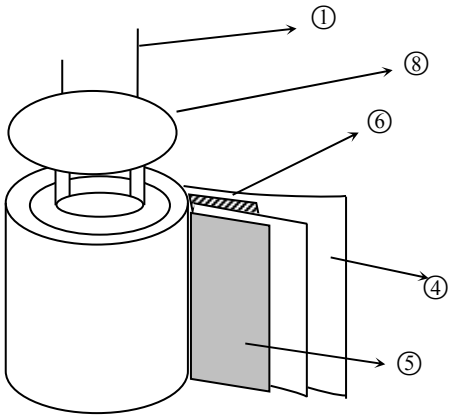

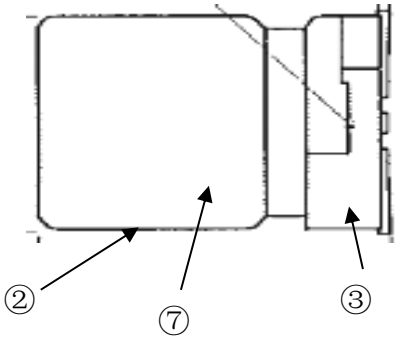

No:	Composing part	Material
①	Lead wire	Fe+Al+Cu+Sn
②	Case	Aluminum
③	Base plate	PPA
④	Paper	Cellulose
⑤	Anode foil	Aluminum foil
⑥	Cathode foil	Aluminum foil
⑦	Chemical liquid	GBL
⑧	Seal	Rubber

KOSHIN

Standard Size map:

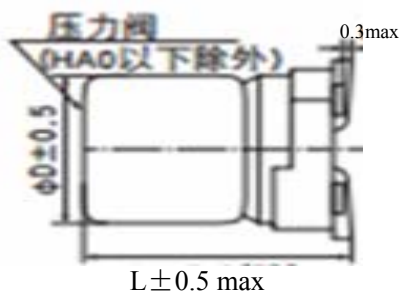

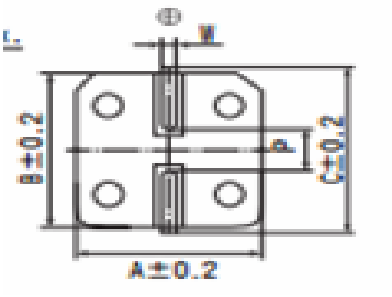

Lead spacing and Diameter Unit: mm

ΦD	L	A	B	C	W	P±0.2
8	10.5	8.3	8.3	9.0	0.7~1.1	3.1

Coefficient of Frequency for Ripple Current

Case Code	Frequency (Hz) / capacitance (uF)	120	1K	10K	100K
B057-G105	1.0	1.00	1.50	1.75	1.80
	2.2 to 10	1.00	1.30	1.40	1.50
	22 to 1,500	1.00	1.05	1.08	1.08
H135-K215	4.7	1.00	1.75	2.30	2.50
	10 to 68	1.00	1.50	1.75	1.80
	100 to 1,000	1.00	1.30	1.40	1.50
	2,200-10,000	1.00	1.05	1.08	1.08

KOSHIN

Series MRW Capacitor

1. Our part No. :

For example :

MRW	016V	471	M	F105
Series code	rated voltage	capacitance	tolerance	case size symbol
MRW	16 v	470 μF	±20%	Φ8X10.5

2 Marking:

Include company's brand series code, rated **voltage,** capacitance **and polarity**

3. Specifications:

3.1 Temperature range : -40 ~+105℃

3.2 Electrical characteristics

3.2.1 Capacitance tolerance : ±20%

3.2.2 Tangent of loss angle (tan δ) : (at 20℃, 120Hz)

Rated voltage(V)		6.3	10	16	25	35	50	63	100	160-250	400-450
tan δ (max.)	B052-G100	0.35	0.24	0.26	0.16	0.14	0.12	0.12	0.12	-	-
	H135-K215	0.38	0.34	0.30	0.26	0.22	0.18	0.14	0.10	0.20	0.25

Note: 0.02 is added to each 1000μF increase over 1000μF

3.2.3 Leakage current (μA) :

	Rated voltage (VDC)	6.3-100	160-450
Leakage Current (μA)	4X5.2-10X10	Less than 0.01CV or 3μA, whichever is large (at 20℃, 2 minutes)	--
	12.5X13.5-18X21.5	Less than 0.03CV or 4μA ,whichever is large (at 20℃, 1 minutes)	0.04CV +100μA (at 20℃,1 minutes)

Note: I : Leakage current (μA) , C : Capacitance (μF) , V : Rated DC working voltage (V)

KOSHIN

RECOMMEDED SOLDERING CONDITIONS FOR ALUMINIUM SURFACE MOUNT TYPE

-Air or Infrared reflow soldering

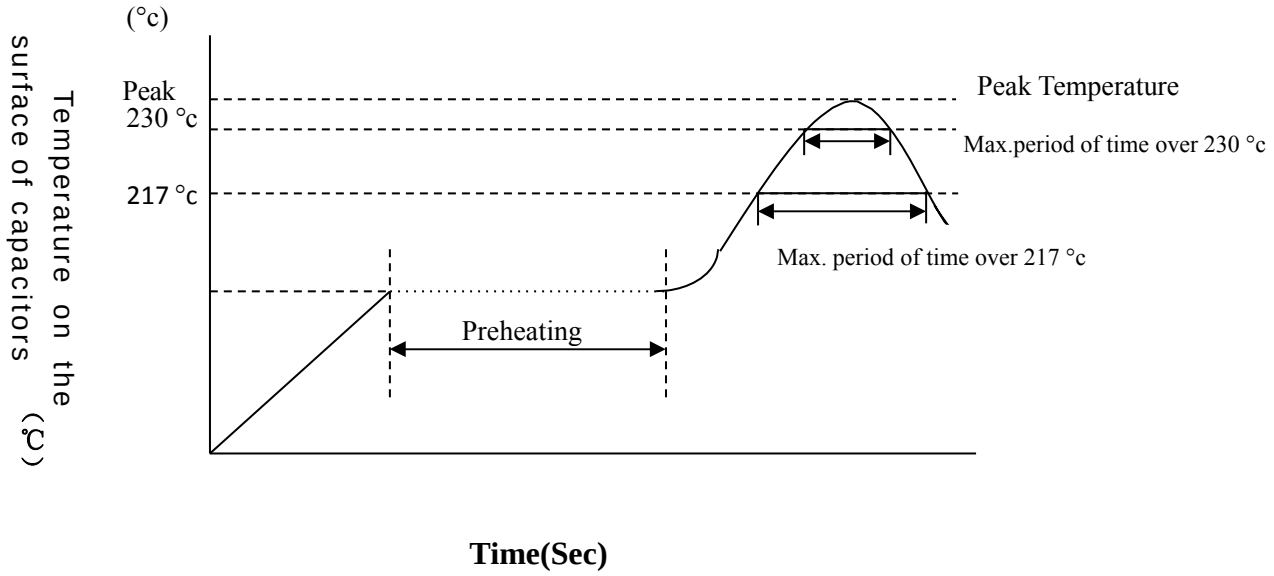

SMDshape	size	voltage	preheating	Time maintained over 217 °c	Time maintained over 230 °c	Peak temperature	Reflow number
	B52~E87	4~63V	150-180C ≤120Sec.	≤90 Sec	≤60 Sec	≤260 °c	≤2 times
		63V,80V		≤60 Sec	≤40 Sec	≤250 °c	≤2 times
	F63~G100	4~50V		≤60 Sec	≤30 Sec	≤245 °c	≤2 times
		63V~100，400V		≤30 Sec	≤20 Sec	≤240 °c	≤2 times
	H135~K215	6.3~50V		≤30 Sec	≤20 Sec	≤240 °c	≤2 times
		63~450V		≤20 Sec	_	≤230 °c	≤2 times

Remark: Reflow number cannot over 2 times. After first time reflow , must be ensure that the temperature of capacitors became cold to room temperature(5～35℃) ,then continue second flow.

KOSHIN

1. Scope:

This specification applies to aluminum electrolytic capacitor ,used in electronic equipment.

2. Electrical characteristics:

<table>
<tr><th>NO.</th><th>ITEM</th><th>TEST METHOD</th><th>SPECIFICATION</th></tr>
<tr><td>2.1</td><td>Rated voltage</td><td></td><td rowspan="2">Voltage range 、capacitance range ,see specification of this series</td></tr>
<tr><td>2.2</td><td>Capacitance</td><td>1.Measuring frequency:120Hz±12Hz
2.Measuring voltage:≤0.5Vrms+0.5VDC~2.0VDC
3.Measuring circuit: (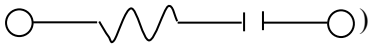)</td></tr>
<tr><td>2.3</td><td>Dissipation factor</td><td></td><td rowspan="2">Dissipation factor, leakage current, see specification of this series.</td></tr>
<tr><td>2.4</td><td>Leakage current</td><td>DC leakage current shall be measured after 1~2minutes application of the DC rated working voltage through the 1000 Ω resistor at 20℃
 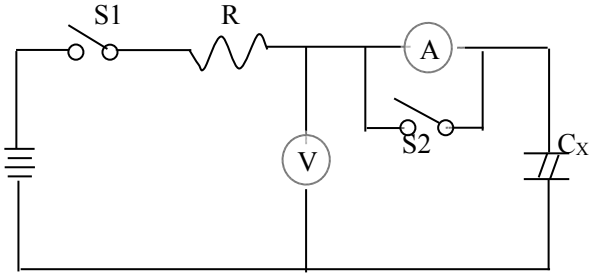

R: 1000Ω 100Ω
A: DC current meter
V: DC voltage meter
S1:Switch
S2:Switch for protect of current meter
C_x: Testing capacitor</td></tr>
<tr><td>2.5</td><td>Temperature characteristics</td><td><table><tr><th>STEP</th><th>TEMPERATURE</th><th>STORAGE TIME</th></tr><tr><td>1</td><td>20℃±2℃</td><td>30minutes</td></tr><tr><td>2</td><td>-40℃±3℃</td><td>2hours</td></tr><tr><td>3</td><td>20℃±2℃</td><td>4hours</td></tr><tr><td>4</td><td>105℃±2℃</td><td>2hours</td></tr></table>Step1.Measure the impedance.
(｜Z｜ ,20℃ 120Hz±2HZ)
Step2. Measure the impedance at thermal balance after 2 hours.
(｜Z ｜ , -40℃ 120Hz±2HZ)
Step4.Measure the leakage current at thermal balance after 2 hours.</td><td>Step2.
Low temperature impedance stability Less than specified value.

Step4.
Capacitance change:
within ± 10% of the initial measured value.

Dissipation factor:
Less than specified value.</td></tr>
</table>

KOSHIN

NO	ITEM	TEST METHOD	SPECIFICATION
2.6	Surge test	Rated surge voltage shall be applied (switch on)for 30 ±5 second and then shall be applied (switch off) with discharge for 5.5min at room temperature. This cycle shall be repeated for 1000 cycles. Duration of one cycle is 6±0.5 minutes	Capacitance change: within ± 15% of the initial specified value. Dissipation factor: Less than specified value. Leakage current: Within initial specified value.

3.Mechanical characteristics

NO.	ITEM	TEST METHOD	SPECIFICATION
3.1	Lead strength	(A)Tensile strength： wire lead terminal： d(mm) ≤0.5 0.5<d≤0.8 0.8＜d≤1.25 load(kg) 0.5 1.0 2.0 The capacitor shall withstand the constant tensile force specified between the body and each lead for 10 seconds without damage either mechanical or electrical. （B）Bending strength： wire lead terminal： d(mm) ≤0.5 0.5<d≤0.8 0.8＜d≤1.25 load(kg) 0.5 0.5 1.0 with the capacitor in a vertical position apply the load specified axially to each lead. The capacitor shall be rotated slowly from the vertical to the horizontal position, back to the vertical position. The 90° in the opposite direction and back the original position. Performance of capacitor shall not have change and leads shall be undamaged.	When the capacitance is measured, there shall be no intermittent contacts, or open-or short-circuiting. There shall be no such mechanical damage as terminal damage etc.

KOSHIN

NO.	ITEM	TEST METHOD	SPECIFICATION
3.2	Vibration resistance	The frequency of the vibration shall vary uniformly within the range 10 to 55 Hz with the amplitude of 0.75 mm, completing the cycle in the internal of one minute. The capacitor shall be securely mounted by its leads with hold the body of capacitor. The capacitor shall be vibrated in three mutually perpendicular directions for a period of 2 hours in each direction.	Capacitance change: within±5% of initial measured value. Appearance: no abnormal.
3.3	Solder ability	The leads are dipped in the solder bath of Sn at 235℃±5℃ for 2 ± 0.5 seconds. The dipping depth should be set at 1.5~2.0 mm.	The solder alloy shall cover the 95% or more of dipped lead's area.

4. Reliability

:

NO.	ITEM	TEST METHOD	SPECIFICATIO
4.1	Soldering heat resistance	The leads immerse in the solder bath of Sn at 260℃±5℃ for 30±1seconds until a distance of 1.5~2.0 mm from the case. After the capacitors are removed from the hot plate and then restored to standard atmospheric conditions for 1 to 2 hours, the capacitors shall meet the right reqiuirements.	No visible damage or leakage of electrolyte. Capacitance change: Within ± 10% of the initial measured value Tan δ : Less than specified value. Leakage current: Less than specified value
4.2	Damp head（steady state）	Subject the capacitor to 40℃±2℃ and 90% to 95% relative humidity for 240±8 hours.	Capacitance change: Within ± 15% of the initial measured value Tan δ : Less than 1.2 specified value. Leakage current: Less than specified value Impedance: Less than 1.2 specified value.

KOSHIN

<table>
<tr><th>NO.</th><th>ITEM</th><th>TEST METHOD</th><th>SPECIFICATION</th></tr>
<tr><td>4.3</td><td>Load life</td><td>The following specifications shall be satisfied when the capacitors are restores to 20℃ after the rated voltage is applied for 2,000 hours at 105℃.</td><td rowspan="2">Capacitance change:
(4-6.3VDC) within±30% of the initial specified value.
(10-100VDC) within±25% of the initial specified value.
(160-450VDC) within±20% of the initial specified value.

Dissipation factor:
(4-100VDC) Less than 300% of the initial specified value.
(160-450VDC) Less than 200% of the initial specified value.

Leakage current:
The initial specified value or less.</td></tr>
<tr><td>4.4</td><td>Shelf life</td><td>The following specifications shall be satisfied when the capacitors are restores to 20℃ after exposing them for 500 hours at105℃ without voltage applied. The rated voltage shall be applied to the capacitors for a minimum for 30 minutes, at least 24 hours and not more than 48 hours before the measurements</td></tr>
<tr><td>4.5</td><td>Storage at low temperature</td><td>The capacitor shall be stored at temperature of -40℃±3℃ for 16 hours, during which time be subjected to standard atmospheric conditions for 16 hours or more. After which measurements shall be made.</td><td>Capacitance change:
Within ±10% of the initial value.

Tan δ :less than specified value

Leakage current:
Less than specified value.

Appearance: no Abnormal.</td></tr>
<tr><td>4.6</td><td>Pressure relief</td><td>AC test:
Applied voltage: AC voltage not exceeding 0.7 times of the rated direct voltage or 250V AC whichever is the lower.

Frequency: 50Hz or 60Hz.
Series resistor :refer to the table below

<table>
<tr><th>Capacitance(C)</th><th>Series resistor</th></tr>
<tr><td>C<1uF</td><td>1000Ω</td></tr>
<tr><td>1uF<C≤10uF</td><td>100Ω</td></tr>
<tr><td>10uF<C≤100uF</td><td>10Ω</td></tr>
<tr><td>100uF<C≤1000uF</td><td>1Ω</td></tr>
<tr><td>1000uF<C≤10000uF</td><td>0.1Ω</td></tr>
<tr><td>10000uF<C</td><td>*</td></tr>
</table>
* Resistance is equivalent to half impedance by test frequency.</td><td>AC test circuit
 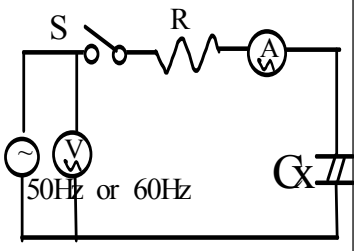

~ : AC power
S : Switch
V : AC voltage meter
A : AC current meter

R : protection resistor

CX : testing capacitor</td></tr>
</table>

KOSHIN

NO.	ITEM	TEST METHOD	SPECIFICATION
4.6	Pressure relief	DC test: Send the following electricity while applying the inverse voltage. Where case size: D≤22.4mm:1 A d.c. max D＞ 22.4mm:10 A d.c. max Note: 1.This requirement applies to capacitors with a diameter of 8 mm or more. 2. When the pressure relief device does not open even 30 minutes after commencement of test, the test may be ended.	DC test circuit 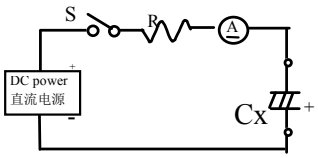 S : Switch Ⓐ: DC current meter Cx: testing capacitor The pressure relief device shall open in such a way as to avoid any damage of fire or explosion of capacitor elements (terminal and metal foil etc.) or cover.
4.7	Temp cycle	LSL temperature(℃):-40±3 time(H)： 0.5H/timeX5 times USL temperature(℃):105±2 time(H)：0.5H/timeX5 times Judgement：CAP：△C/C≤±10%，Appearance no Abnormal. No electrolyte leakage。	
4.8	Thermal shock	dry heat temperature（℃)：105±2 time(H)：16 moist heat temperature(℃)：55 time(H)：24/ cold temperature(℃)：-40±2 time(H)：2/ moist heat temperature(℃)：55 time(H)：24 ：Judgement：CAP,△C/C≤±10%, Tan δ :Less than 1.2 specified value, Leakage current: Less than specified value. Appearance no Abnormal. No electrolyte leakage。	

5．Marking For example:

5.1. Marking on capacitors include:

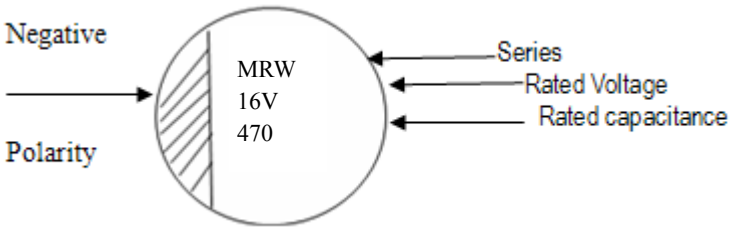

1>. Series

2>. Rated voltage

3>. Rated capacitance (u F)

4>. Polarity

5.2. Marking color: Blue

KOSHIN

Detergent needing attention

Hydrogen carbide liquid and halogen liquid can cause Aluminum Electrolytic Capacitor to corrode. Some of Safe and Unsafe detergent are as follows

Safe	Unsafe
Dimethylbenzene	1,1,2-trichloroethane
Ethanol	1,2,2- trichloroethane
Butanol	Tetrachloroethylene
Methanol	Chloroform(colorless volatilizable liquid)
Propanol	Dichloromethane
Detergent	Trichloroethylene

KOSHIN

Carrier Pack Taping Specification:

Fig.1

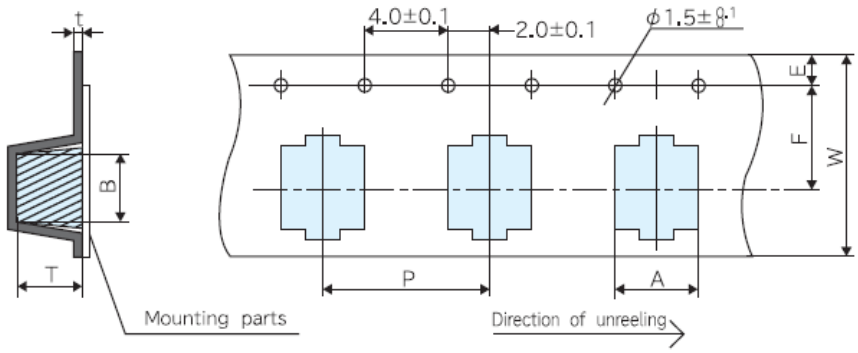

Product size table

Unit: mm

Dimension / Size Code	A	B	W	F	E	P	t	T
Φ8X10.5	8.7±0.2	8.7±0.2	24	11.5	1.75±0.1	16	0.6max	11.0±0.2

Polarity:

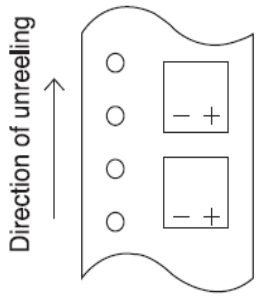

Package for SMD Type:

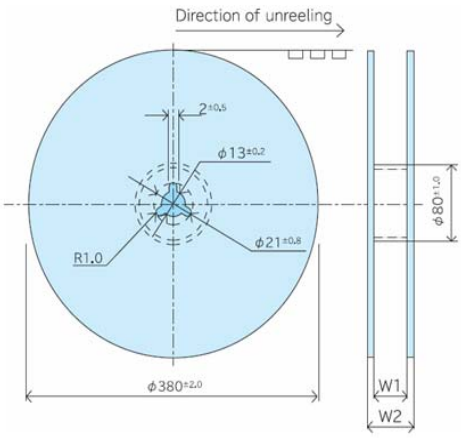

Size Code	W1(mm)	W2(mm)	Q'ty(pcs/reel)	Q'ty(pcs/reel)
Φ8	26±0.5	30.5±1.0	500	4000

KOSHIN

Surface Mount Aluminum Electrolytic Capacitor Specification

Series	MRW	16 V 470 μF	Part No.	MRW-016V471MF105-T/R
Customer No.			Case size	ΦD8 X L 10.5

Specification	Items	Standard
	Operating temperature range	- 40 ~ + 105 ℃
	Capacitance tolerance	±20% (20℃ , 120Hz)
	Dissipation factor (MAX)	(Less than) 26% (20℃ , 120Hz)
	Leakage current (MAX)	(Less than) 75.2 μA (20℃ 16 V 2 min)
	Impedance(MAX)	/
	Ripple current (MAX)	320 mArms (120Hz , 105℃)
	Load life	2000 hrs
Outline	Marking color	Blue
	(Dimensions)	

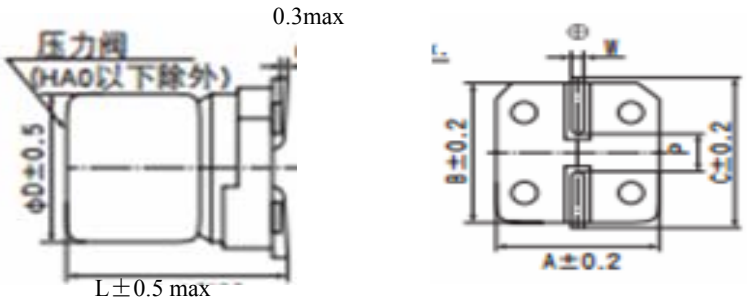

(unit):mm

ΦD	L	A	B	C	W	P±0.2
8	10.5	8.3	8.3	9.0	0.7～1.1	3.1

Recorder	(The first edition) :2020-5-9

Wrote by: MengXiaoCong	Checked by: JiangYuanYuan	Approved by: HuangXueHui

(Issue No.): DJJ-2875