PANJIT SEMI CONDUCTOR

GRANDE.LTD.

DATA SHEET

1N4148-34

SWITCHING DIODES

VOLTAGE	100 Volts	POWER	500 mWatts

DO 34 Unit: inch (mm)

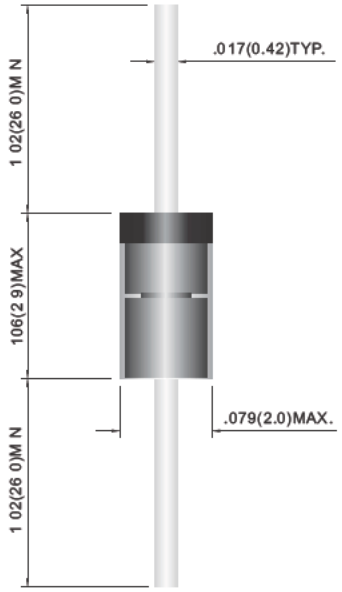

FEATURES

- Fast switching Speed.
- Electrically Identical to Standerd JEDEC
- High Conductance
- Axial lead Package Ideally Suited for Automatic Insertion.
- Both normal and Pb free product are available :
  Normal : 80~95% Sn, 5~20% Pb
  Pb free: 98.5% Sn above

MECHANICAL DATA

- Case: Molded Glass DO-34
- Terminals: Solderable per MIL-STD-202E, Method 208
- Polarity: See Diagram Below
- Approx. Weight: 0.09 grams
- Mounting Position: Any
- Ordering information: Suffix : " -34 " to order DO-34 Package
- Packing information
  B - 2K per Bulk box
  T/R - 10K per 13" plastic Reel
  T/B - 5K per horiz. tape & Ammo box

MAXIMUM RATINGS AND ELECTRICAL CHARACTERISTICS (T_J=25°C unless otherwise noted)

PARAMETER	SYMBOL	1N4148	UNITS
Reverse Voltage	V_R	75	V
Peak Reverse Voltage	V_{RM}	100	V
RMS Voltage	V_{RMS}	50	V
Maximum Average Forward Current at Ta=25°C And f≥ 50Hz	I_{AV}	150	mA
Surge Forward Current at t< 1s and Tj=25 °C	I_{FSM}	500	mA
Power Dissipation at Tamb= 25 °C	P_{TOT}	500	mW
Maximum Forward Voltage at I_F=10mA	V_F	1.0	V
Maximum Leakage Current at V_R=20V at V_R=75V at V_R=20V ,T_J= 150 °C	I_R	 25 5 50	 nA µA µA
Maximum Capacitance (Note 1)	C_J	4	pF
Maximum Reverse Recovery Time (Note 2)	T_{RR}	4	ns
Maximum Thermal Resistance	$R\theta JA$	350	°C /W
Junction Temperature and Storage Temperature Range	T_J,T_S	-65 to +175	°C

NOTE:

1. CJ at V_R=0, f=1MHZ
2. From I_F=10mA to I_R=1mA, V_R=6Volts, R_L=100Ω

RATING AND CHARACTERISTIC CURVES

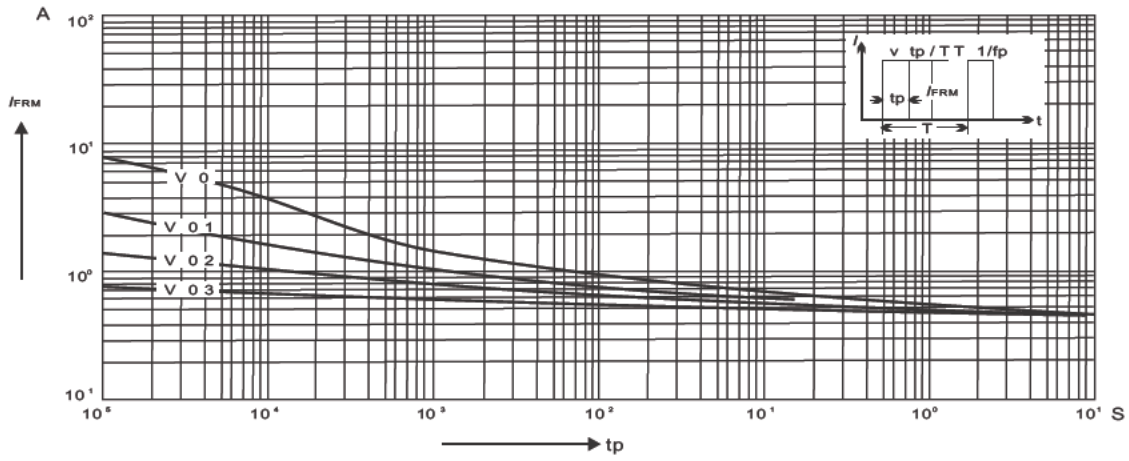

Fig.1 ADMISSIBLE REPETITIVE PEAK FORWARD CURRENT VERSUS PULSE DURATION

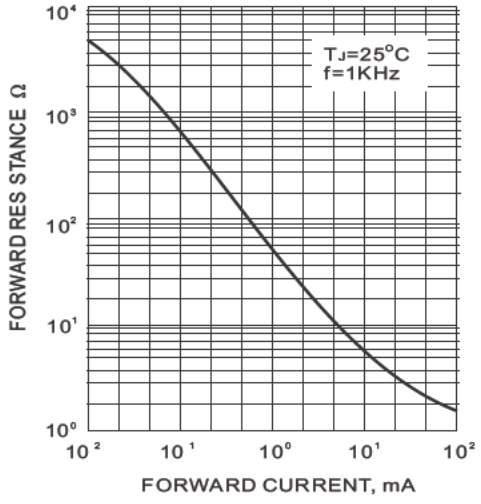

Fig.2-DYNAMIC FORWARD RESISTANCE VERSUS FORWARD CURRENT

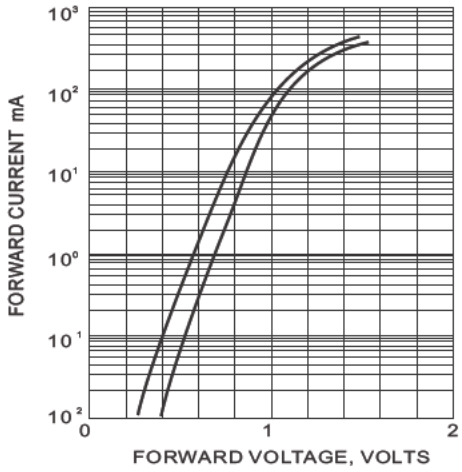

Fig.3 FORWARD CHARACTERISTICS

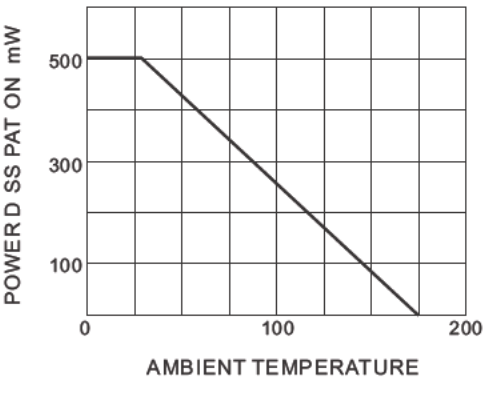

Fig.4 DERATING CURVE

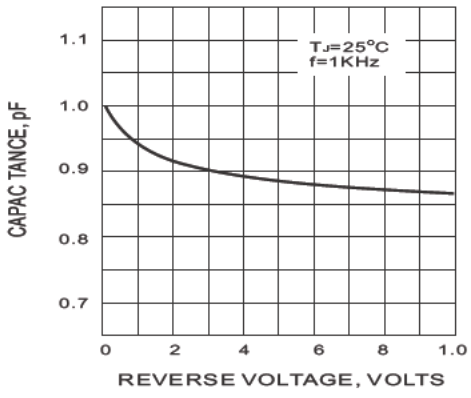

Fig.5 TYPICAL JUNCTION CAPACITANCE