Economic LED Power Supply

CC Version

Reliable Technical Data

- Rated Input Voltage:200-240VAC
- Input Frequency:50Hz
- Output Power:8W
- Body:PC
- Open Circuit;Short Circuit;Over Load;
- Over Heat Protection

- Safety According to EN61347-1,EN61347-2-13
- EMI According to EN55015
- EMF According to EN62493-2010
- EMS According to EN61000-3-2;EN61000-3-3;EN61547
- Approbation Mark:CE ROHS;TUV;C-Tick

CC Version

Dimension in mm

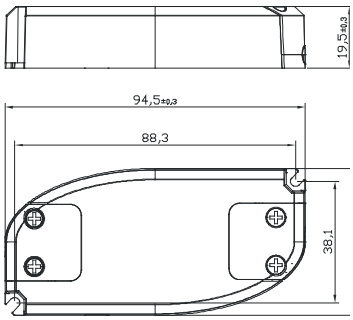

SELV

Characteristics

Rated input voltage: AC200-240V 50Hz (power factor measured at AC230V and full load)

Model No.	Constant output Current	Load	output Voltaget	PF	Ta	Tc	L×W×H	Approval
SNP8-350IL	350mA	4.2-8.4W	12-24VDC	≥0.8	45℃	80℃	94.5X46.2X19.5	TUV pending
SNP8-500IL	500mA	4-8W	8-16VDC	≥0.8	45℃	80℃	94.5X46.2X19.5	TUV pending
SNP8-700IL	700mA	4.2-8.4W	6-12VDC	≥0.8	45℃	80℃	94.5X46.2X19.5	TUV pending

Model No.	Constant output Current	Load	Max output Voltaget	PF	Ta	Tc	L×W×H	Approval
SNP8-350IL-1	350mA	4.2-8.4W	12-24VDC	≥0.5	45℃	80℃	94.5X46.2X19.5	TUV pending
SNP8-500IL-1	500mA	4-8W	8-16VDC	≥0.5	45℃	80℃	94.5X46.2X19.5	TUV pending
SNP8-700IL-1	700mA	4.2-8.4W	6-12VDC	≥0.5	45℃	80℃	94.5X46.2X19.5	TUV pending