REVISIONS				
ZONE	REV.	DESCRIPTION	DATE	APPD.

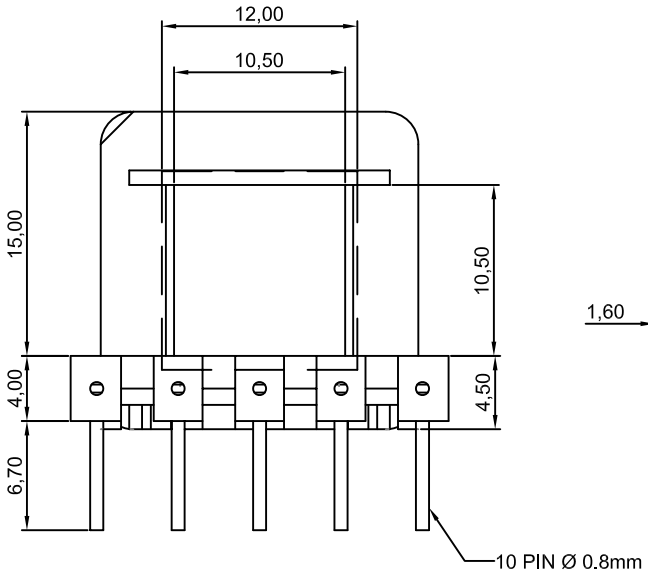

FRONT VIEW

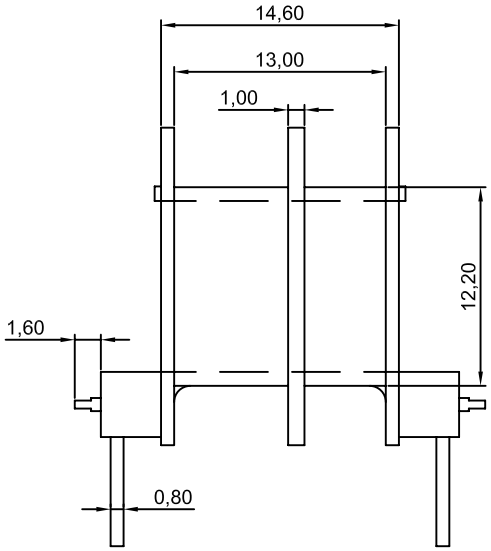

R.H.SIDE VIEW

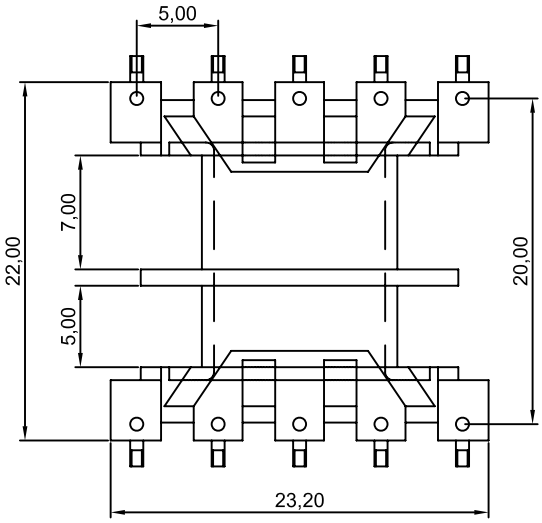

BOTTOM VIEW

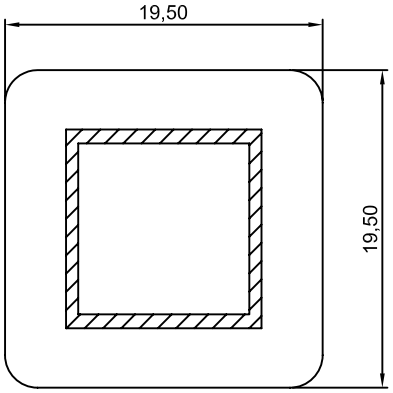

SECTION A-A'

COMPONENT WEIGHT: 2.5 GMS

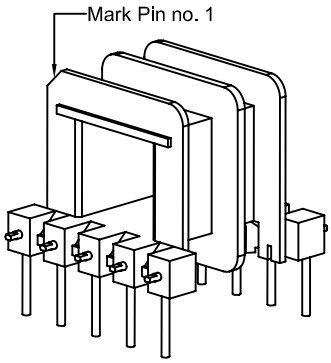

NOTE:
(1) All dimensions are in mm.
(2) Tolerance for all dimension is (±0.2)
(3) Molding Material:
(a) Zytel FR 50 BK 153J - UL & RoHS
(b) Zytel 70G33L BK 031 - Non UL.
(c) Zytel 70G33L NC 010 - Non UL
(d) Rynite FR530L BK507 - UL & RoHS
(e) Ultramid A3X2G5 - UL & RoHS
(5) Pin Material: C.C.S Wire with Tin (Su) Plated

	NAME	SIGN.	DATE
DESIGN BY	SACHIDANAND	Sachidanand	12.04.08
CHECKED BY	MANOJ GUPTA		12.04.08
APPR. BY	MANOJ GUPTA		12.04.08

DURGA ELECTRONICS (INDIA)

COMPONENT NAME: BOBBIN

PART NO: EI 3010.5 HORIZONTAL 10 PIN 2SEC L TYPE

REMARKS:

REV. 00

SCALE: NTS | DRG.NO: DEI/DRG/L049 | PATH

D:\DURGA\LAMINATION CORE\EI 3010.5 HORIZONTAL 10 PIN 2SEC L TYPE