CAD FILE:

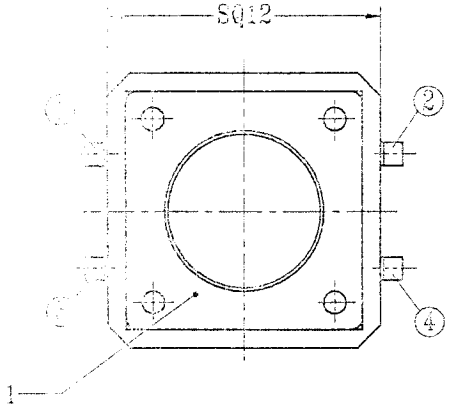

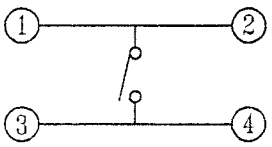

SCHEMATIC

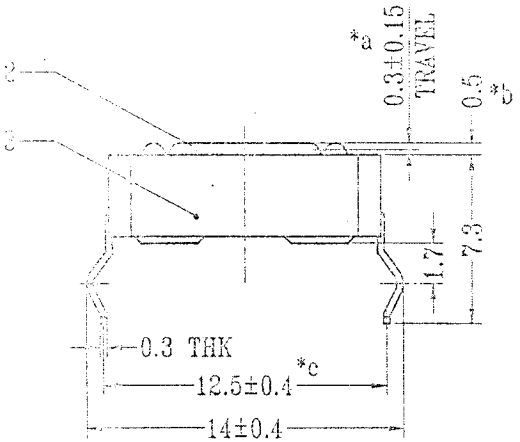

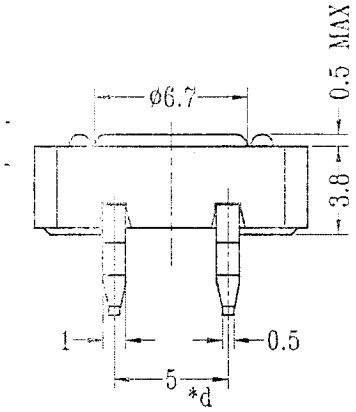

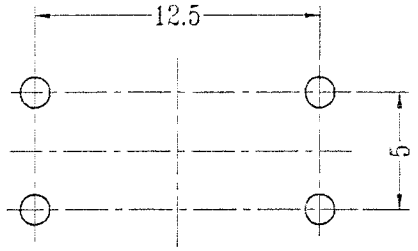

P.C.B LAYOUT

注："*"表示關鍵尺寸(4個)

NO.	PARTS	MATERIALS	Q'TY	FINISH
4	CONTACT	PBS C5210R-EH	1	Ag CLAD
3	CASE	NYLON+F.G/BRASS STRIP	1	BLACK/Ag PLATED OVER Ni PLATED
2	KNOB	NYLON	1	BLACK
1	COVER	PET/ZINC PLATE	1	CLEAR/Ni PLATED

TOLERANCE UNLESS SPECIFIED				
WITHIN 1.5mm : ±0.1mm OVER 1.5mm : ±0.2mm	C ISSUE	25-Oct-2005 DATE	修正零件用料 DESCRIPTIONS OF REVISION	黃子傑 APPD.

TITLE : TACT SWITCH	UNIT : mm	DRWG NO.: TT-DR-TC12XD-00	
MODEL: TC-12XD	SCALE: 3:1	DWN. 陳 強	25-Oct-2005
		CHK'D 徐 毅	25-Oct-2005
WEALTH METAL FACTORY LTD.		APPD. 黃子傑	25 Oct 2005