RoHS Compliance

REV	SYM	Revision Record	Appr.	Date
V0	KLS07088	New Version Release	Song	2025-04-07

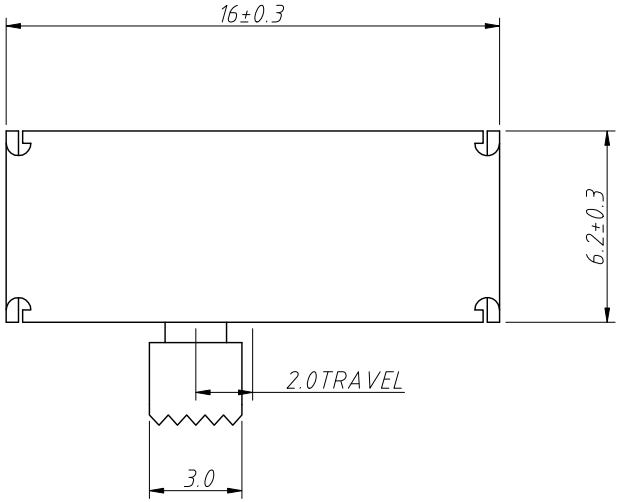

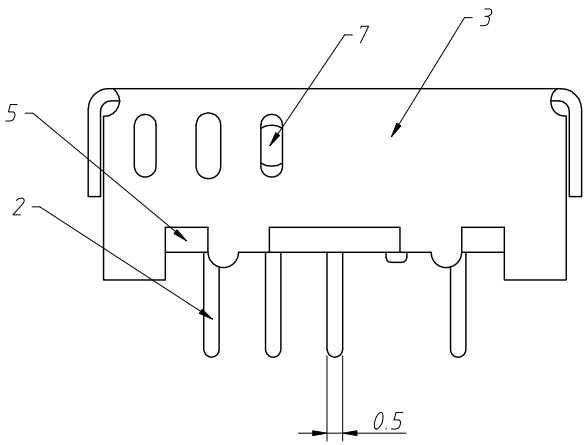

Notes:

Material:

1.Knob: POM Black

2.Terminal:Brass Strip,Ag Plated

3.Shell:Cold Rolled Steel Strip,Ni Plating

4.Code Chip:Phosphorus Copper Strip,Ag Plated

5.Base:Cold punching plate,Natural

6.Spring:Carbon Steel Wire,Natural

7.Steel Ball:Carbon Steel,Natural

Electric:

Rated: DC50V 0.3A

Contact Resistance:100 mΩ Max

Insulator Resistance:100 MΩ Min

Withstand Voltage: AC 500V

Force:250±100gf

Life:5000 Times

Hand Welding:350°± 10°

Wave Soldering:240°± 5°

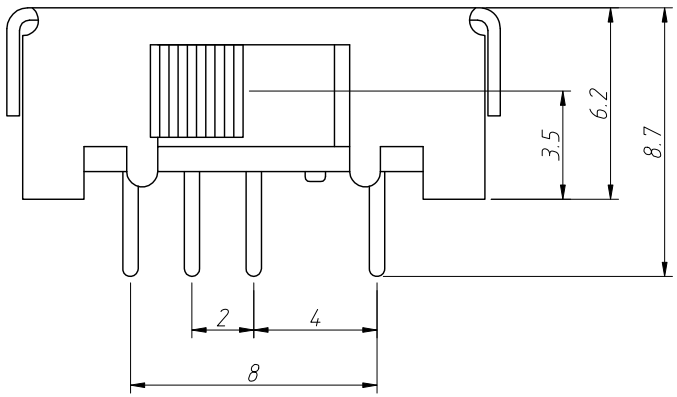

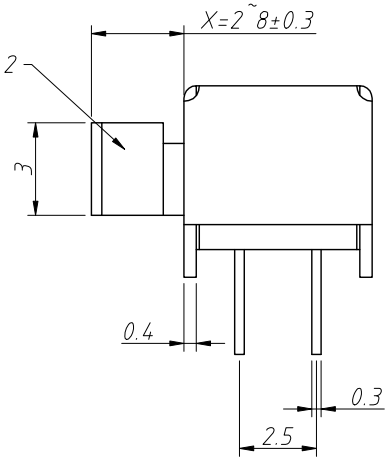

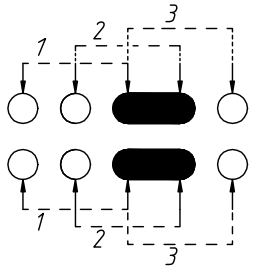

SCHMATIC(NON-SHORTING)

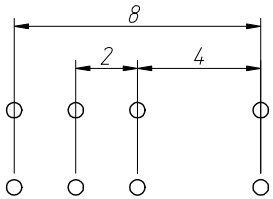

PCB HOLE

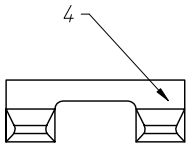

Code Chip

ANGLE TOLERANCE	PROJECTION		Description:	Slide Switch
±3°				
GENERAL TOLERANCE	UNITS	mm	KLS P/N:	L-KLS7-SK-23D08-EGX
.x ±0.30	SHEET SIZE	A4		NingBo KLS ELECTRONIC CO.,LTD.
.xx ±0.20	Draw:	Song	2025-04-07	
.xxx ±0.10	Check:	Daniel	2025-04-07	