REV.	DESCRIPTION	DRAWN	DATE
1	INITIAL RELEASE	Tim	2024/04/22

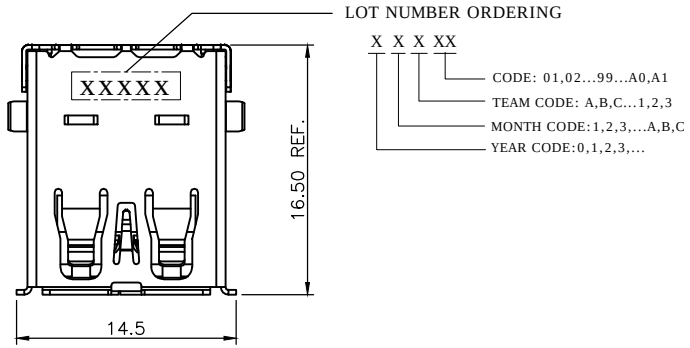

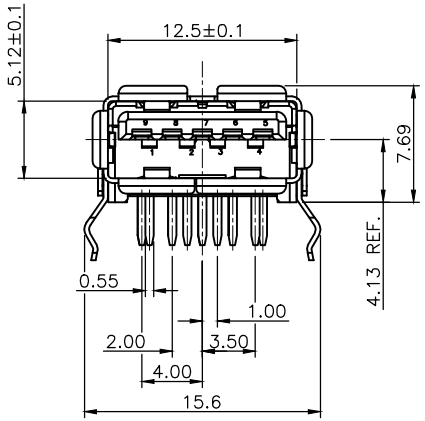

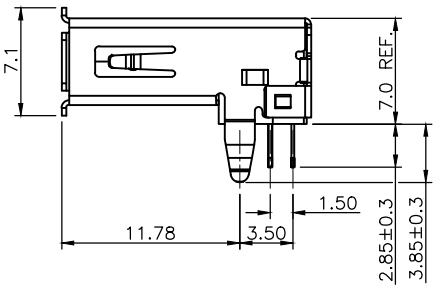

SPECIFICATION:

1. ELECTRICAL
1.1 Current Rating: 1.8AMP
1.2 Voltage Rating: 30VAC
1.3 Contact Resistance: 30mΩ
1.4 Insulation Resistance: 100MΩ
1.5 Dielectric Withstanding Voltage: 100VAC

2. MECHANICAL
2.1 Durability: 1500Cycle
2.2 Insertion Force: 35N max
2.3 Extraction Force: 10N min

3. ENVIRONMENTAL
3.1 Operating temperature: -55°C to +85°
3.2 Storage temperature: -55°C to +85°

4. SOLDER ABILITY
4.1 Resistance to solder heat: 260°C ±5 sec

5.1 Meet the USB 3.0 Specification

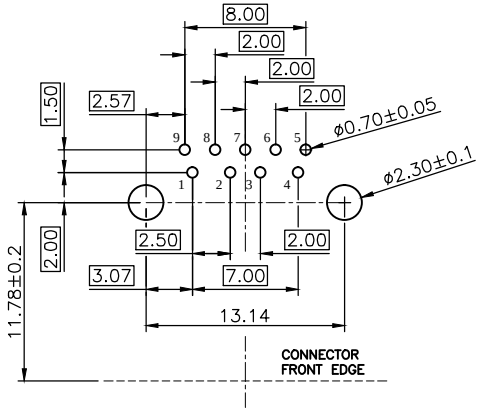

RECOMMENDED LAYOUT (TOP VIEW)
GENERAL TOLERANCE: ±0.05mm

Pin Assignments	
Pin No.	Signal Name
1	VBUS
2	D-
3	D+
4	GND
5	StdA_SSRX-
6	StdA_SSRX+
7	GND_DRAIN
8	StdA_SSTX-
9	StdA_SSTX+
Shell	Shield

NO.	PART NAME	DESCRIPTION
5	SHELL	Stainless Steel, Nickel plated
4	CONTACT	Copper alloy, under plated Nickel 30u" Pd-Ni + 2u" Gold plating on contact area, Tin plating on solder tail
3	COVER	High Temperature Thermoplastic, Black
2	4PIN HSG	High Temperature Thermoplastic, Black
1	5PIN HSG	High Temperature Thermoplastic, Blue

UNLESS OTHERWISE SPECIFIED TOLERANCE

UNIT:	DECIMAL	LINEAR	ANGLES
mm	X.	±0.50	±5°
	X.X	±0.25	±3°
	X.XX	±0.15	±1°

ATTEND
www.attend.com.tw

DRAWN	Tim	2024/04/22
CHECKED	Fros	2024/04/22
APPROVED	Ken	2024/04/22

DRAWN NAME: USB3.0 A Receptacle, R/A DIP 30u"Pd-Ni + 2u" Gold, Shell Kink

PRODUCT NO. 209B-DG11

SCALE	SHEET	SIZE	FILE NAME
2/1	1/1	A4	209B-DG11_B_1