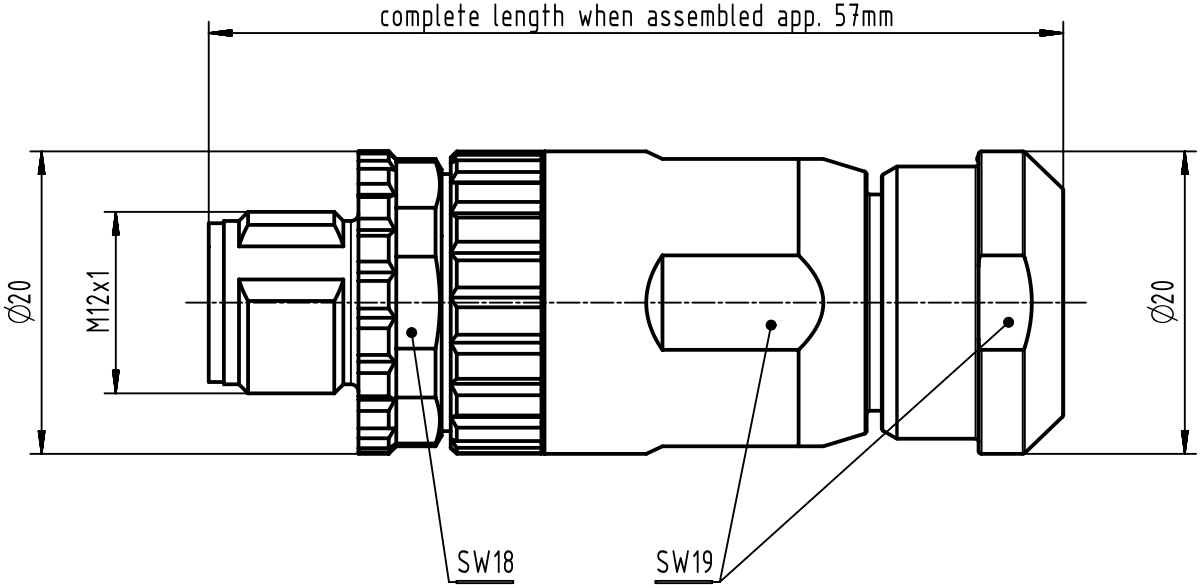

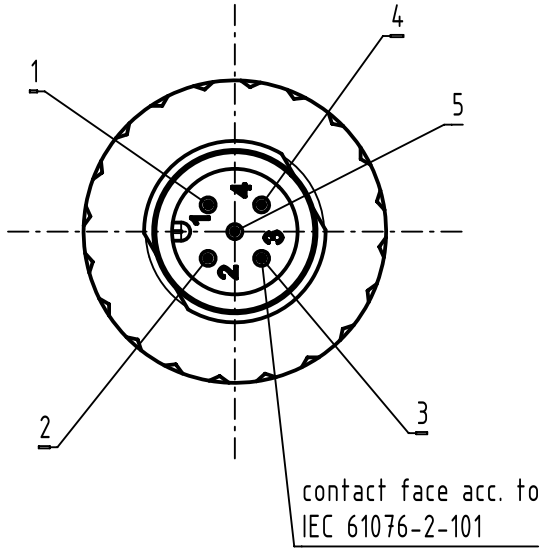

conductor cross section	1.5mm² max. AWG16
cable outside diameter	4 - 8mm

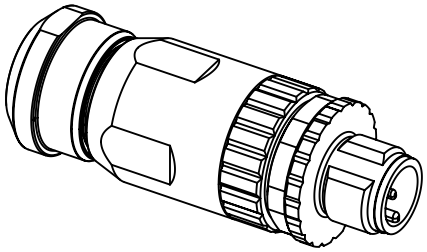

All Dimensions in mm
Original Size DIN A4

Scale 2:1

Free size tol.

Ref.

Sub.

All rights reserved

Department EC PD - DE

HARTING Electronics GmbH
D-32339 Espelkamp

Created by	Inspected by	Standardisation	Date	State
EISFELD	WELLMANN	KOHLER	2015-05-12	Final Release

Title: HARTING M12 Screw straight 5-pole A-coded male shielded

Doc-Key / ECM-Nr.
100621569/UGD/000/A
500000089167

Type: TB

Number: 21033291501

Rev.: A

Page: 1/1

A4