part-number	poles (n)	Dim. L	Dim. a
14020216404000	2	10	5
14020316404000	3	15	10
14020416404000	4	20	15
14020516404000	5	25	20
14020616404000	6	30	25
14020716404000	7	35	30
14020816404000	8	40	35

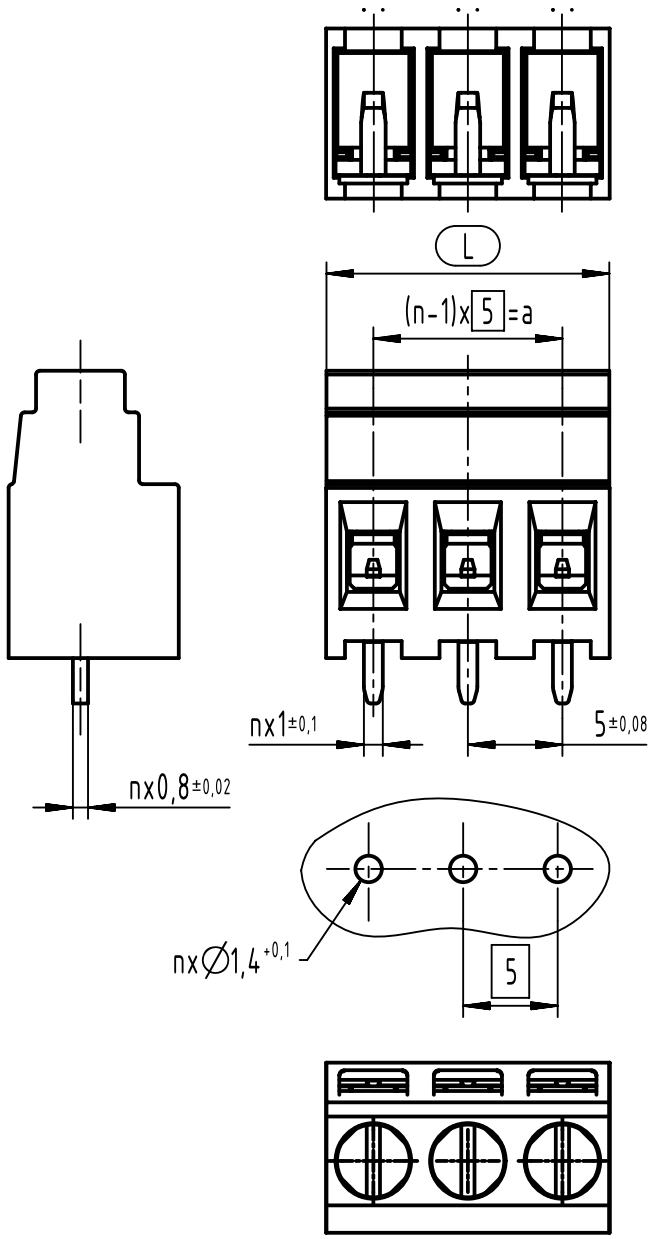

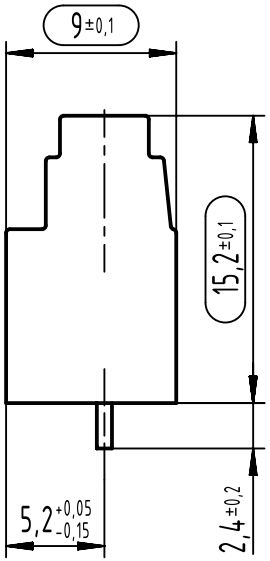

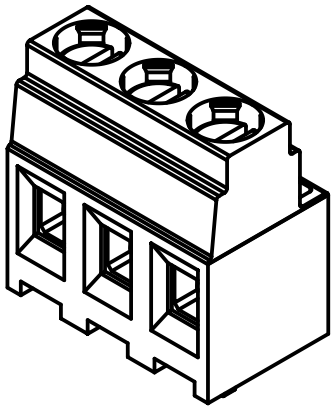

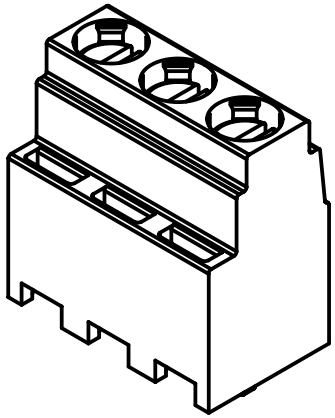

further information see: DS 14027301801

All Dimensions in mm Original Size DIN A4	Scale 2:1	Free size tol.		Ref. Sub. TB 1402XX16404XXX / 500000077815 / 2014-07-24
All rights reserved Department EL PD	Created by ZHUANGJ	Inspected by LUOK	Standardisation 302077	Date 2021-06-22 / State Final Release
HARTING D-32339 Espelkamp	Title har-flexicon 5.00 TTSH-xx BK 2.5sqmm			Doc-Key / ECM-Nr. 100529097/UGD/001/F 500000197092
	Type TB	Number 1402XX16404000		Rev. F / Page 1/1

A4