Alle Rechte vorbehalten/ *All rights reserved*

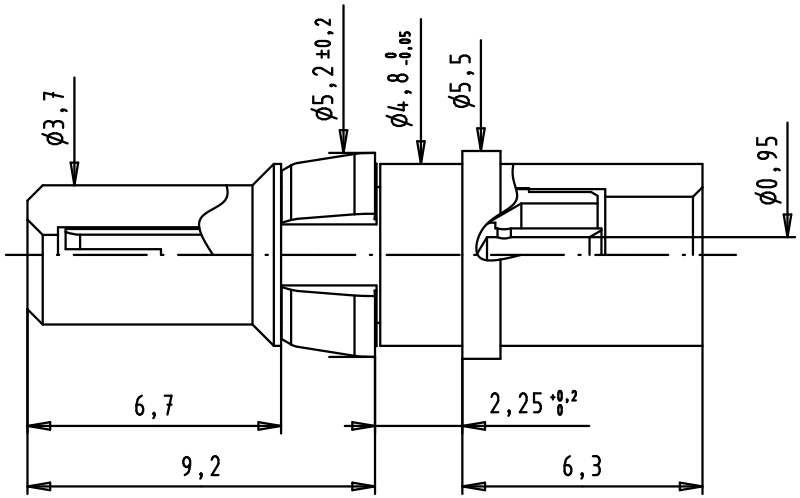

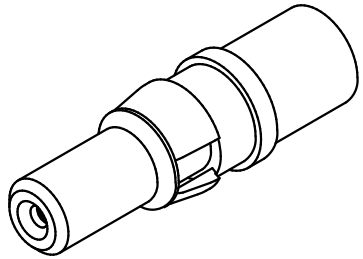

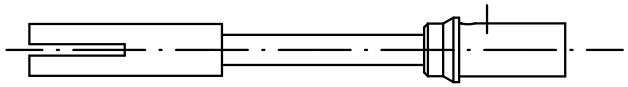

Crimping tool :
hand tool : 09 99 000 0501
Die : 09 99 000 0507
With cables AWG 24 and 26, use tool selection 5
With cables AWG 28, use tool selection 4
With cables AWG 30, use tool selection 3

Part number	Conductor plating	plating
09 69 282 2550	Mating area	1,3 µm Au
	Termination area	1,3 µm Au

Mod.	Dat.	Name
36157	09/11/10	SC

	Dat.	Name
Detail.	09/11/10	SC
Insp.		
Stand.		

All Dim. in mm
Orig. Size DIN A 4

HARTING EURL
F-95972 Paris

D-Sub, male high voltage contact, straight cable, crimp termination

Maßstab/ *Scale* 5:1

TB 09 69 282 2550

Sub.

Blatt/ *Page* 1/1